DRG. NO. RD DG 4 35 0617 0951

FIRST ANGLE PROJECTION

(ALL DIMENSIONS ARE IN mm)

(~3.2)

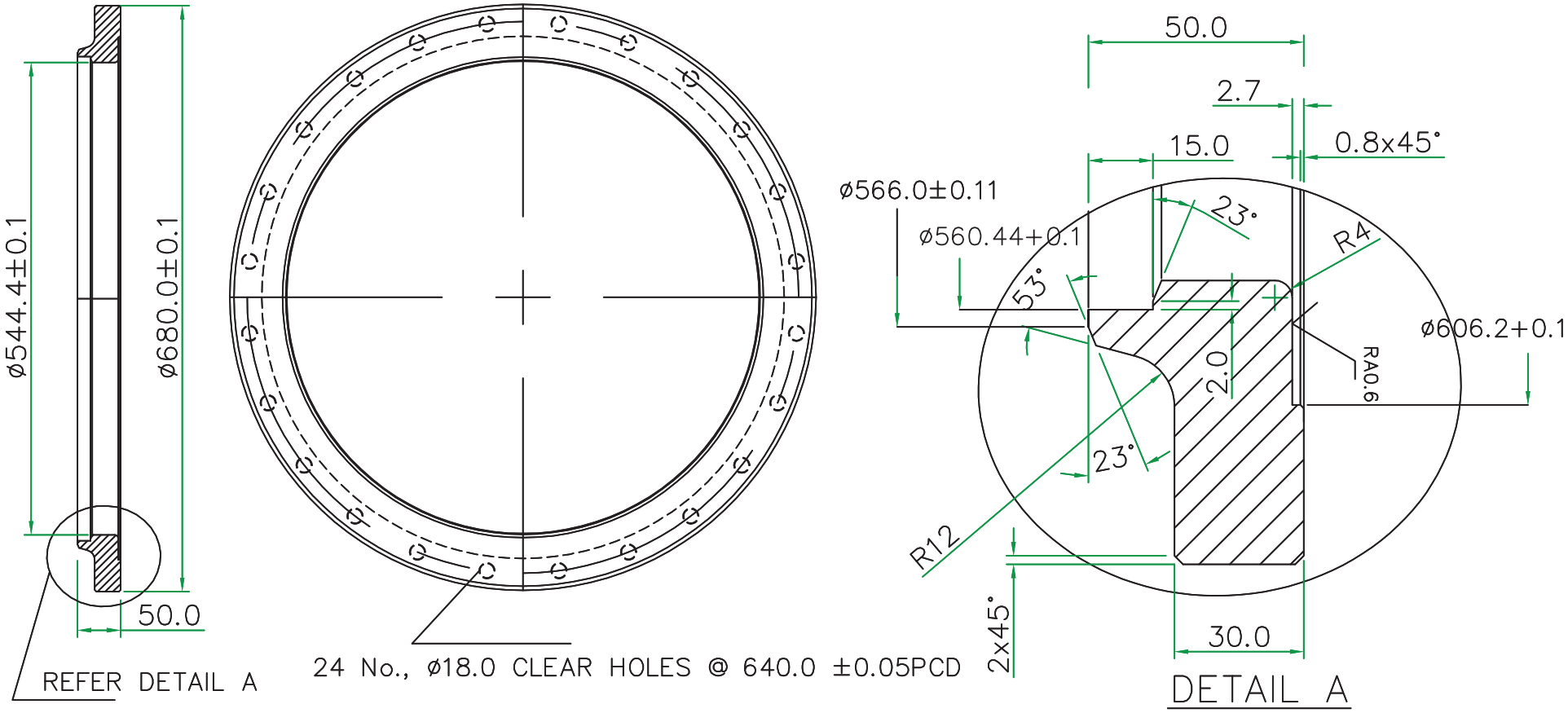

Note:

1. Sealing area shall be plosihed to RA 0.8 or better.
2. ø 18.0 holes shall be chamfered uniformly (0.8x45°).
3. PCD and flange centre shall be concentric within ±0.1
4. Finished flange shall be degreased and packed in 125 micron poly bag and sealed.
5. Component shall be Machined to dimensions after welding to spherical pipe

FINAL ON 29/05/14

VAR.00	REMARKS	VAR NO.	ITEM NO.	DESCRIPTION	STD	DRAWING NO.	IT.NO. / VAR	MATL. CODE / MATL. SPECN.	A C	UNIT	UNIT WT. / QTY.	GS	ZONE
			01	SS FLANGE		RD DG 4 35 0617 0113B		SS-304 L			45.0 KG / 02		

TYPE OF PRODUCT / NAME OF CUSTOMER: GSM-420

BHARAT HEAVY ELECTRICALS LTD. HYDERABAD

	NAME	SIGN.	DATE	NO.OF VAR.
DRN	KSRAO		26.12.05	01
CKD	MMRAO		02.01.06	
APPD	HSJAIN		02.01.06	

REV.	DATE	ALTERED / CHECKED	REV.	DATE	ALTERED / CHECKED
ZONE			ZONE		

DEPT. / CODE	GRADE OF TOL. DIM. C/M/F	SCALE	WEIGHT(KG)	REF. TO	ITEM NO.	NO.OF ITEMS
		NTS	45.0 KG	RD DG 4 35 0617 0950	1	

TITLE: FLANGE I

CARD CODE

DRAWING NO. RD DG 4 35 0617 0951 — REV.

SHEET NO. — NO. OF SHEETS

REF. DRG. NO. — SIGN. AND DATE — INVENTORY NO.

THE INFORMATION ON THIS DOCUMENT IS THE PROPERTY OF BHARAT HEAVY ELECTRICALS LIMITED.
IT MUST NOT BE USED DIRECTLY OR INDIRECTLY IN ANY WAY DETRIMENTAL TO THE INTEREST OF THE COMPANY.