DRG. NO. RD DG 4 35 0618 0111

FIRST ANGLE PROJECTION

(ALL DIMENSIONS ARE IN mm)

(~3.2)

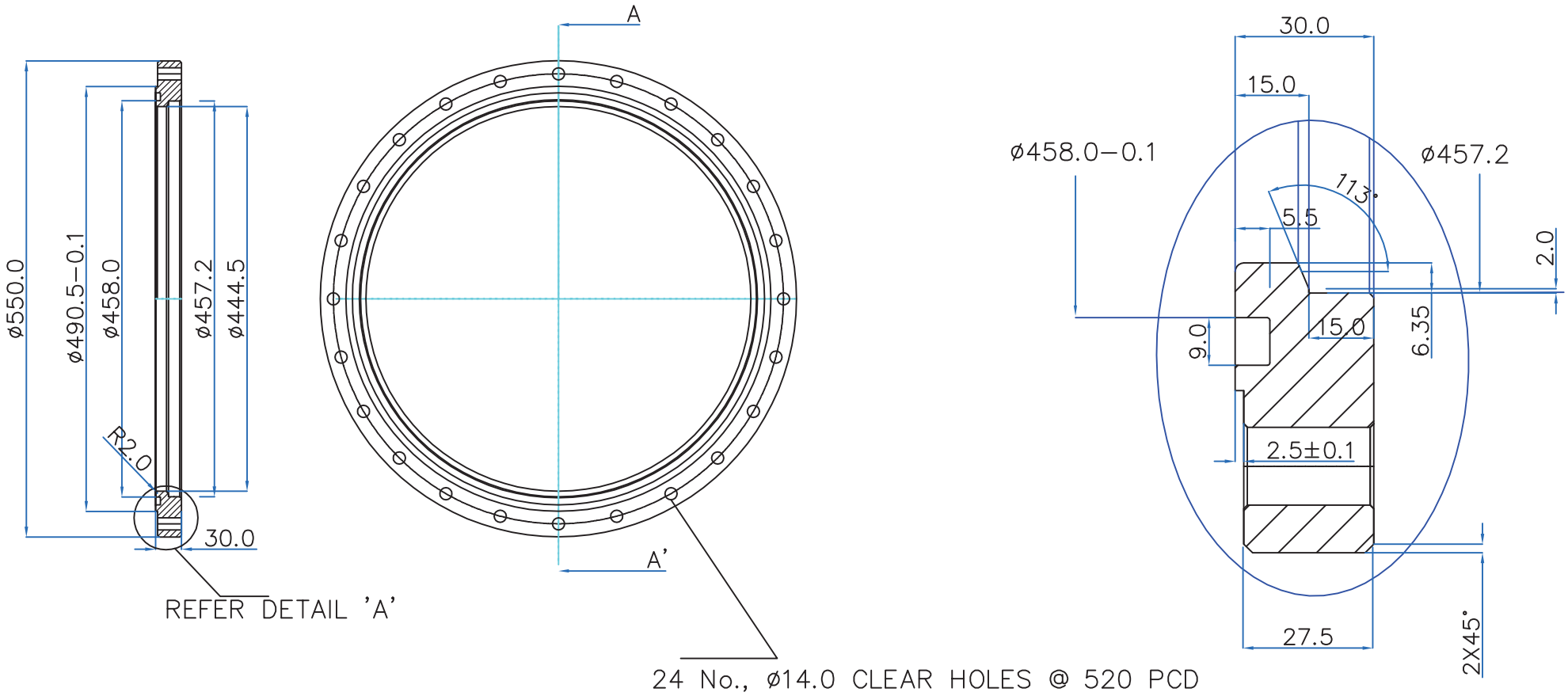

			01	PLATE				SS−304 L		01

TYPE OF PRODUCT

NAME OF CUSTOMER

GSM−245

BHARAT HEAVY ELECTRICALS LTD.
HYDERABAD

	NAME	SIGN.	DATE
DRN	MINTOO		10.07.14
CKD	MMRAO		12.07.14
APPD	MMRAO		12.07.14

REV.	DATE	ALTERED	REV.	DATE	ALTERED
		CHECKED			CHECKED
ZONE			ZONE		

DEPT.	GRADE OF TOL. DIM. C/M/F	SCALE	WEIGHT(KG)	REF. TO	ITEM NO.
CODE		NTS		RD DG 4 35 0618 0110	1

TITLE

FLANGE − 1

CARD CODE

DRAWING NO.

RD DG 4 35 0618 0111

SHEET NO. | NO. OF SHEETS