DRG. NO. RD DG 4 35 0618 0113A

FIRST ANGLE PROJECTION

(ALL DIMENSIONS ARE IN mm)

(~3.2)

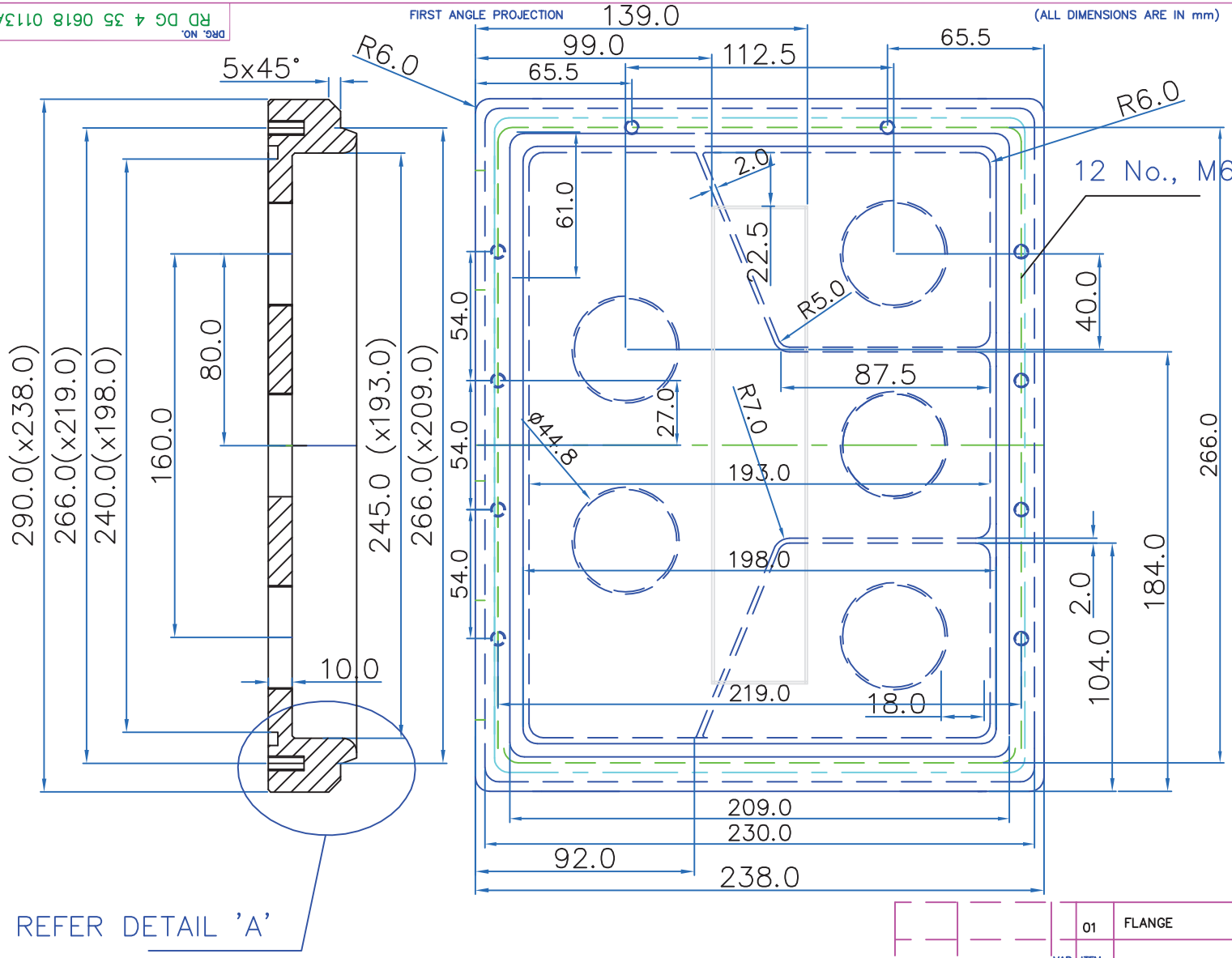

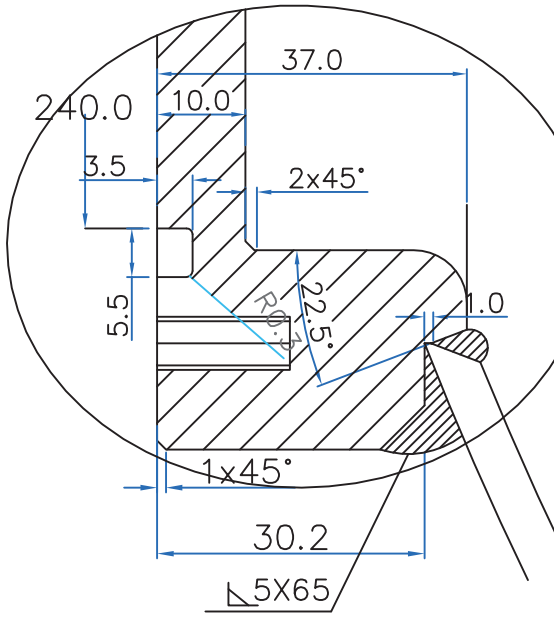

DETAIL 'A'

VAR.00	REMARKS	VAR NO.	ITEM NO.	DESCRIPTION	STD	DRAWING NO.	IT.NO. / VAR	MATL. CODE / MATL. SPECN.	A C	UNIT	UNIT WT. / QTY.
			01	FLANGE		295.0X240.0X40.0		SS 304-L			01

09/10/14

TYPE OF PRODUCT

NAME OF CUSTOMER GSM-245

BHARAT HEAVY ELECTRICALS LTD. HYDERABAD

	NAME	SIGN.	DATE
DRN	Mintoo		19.07.14
CKD	MMRAO		19.07.14
APPD	MMRAO		19.07.14

REV.	DATE	ALTERED / CHECKED	REV.	DATE	ALTERED / CHECKED
ZONE			ZONE		

DEPT. / CODE | GRADE OF TOL. DIM. C/M/F | SCALE NTS | WEIGHT(KG) | REF. TO RD DG 4 35 0618 0113 | ITEM NO. 1

TITLE FLANGE | CARD CODE | DRAWING NO. RD DG 4 35 0618 0113A | SHEET NO. | NO. OF SHEETS