FIRST ANGLE PROJECTION

(ALL DIMENSIONS ARE IN mm)

DRG. NO. RD DG 4 35 0618 0113C

(~3.2)

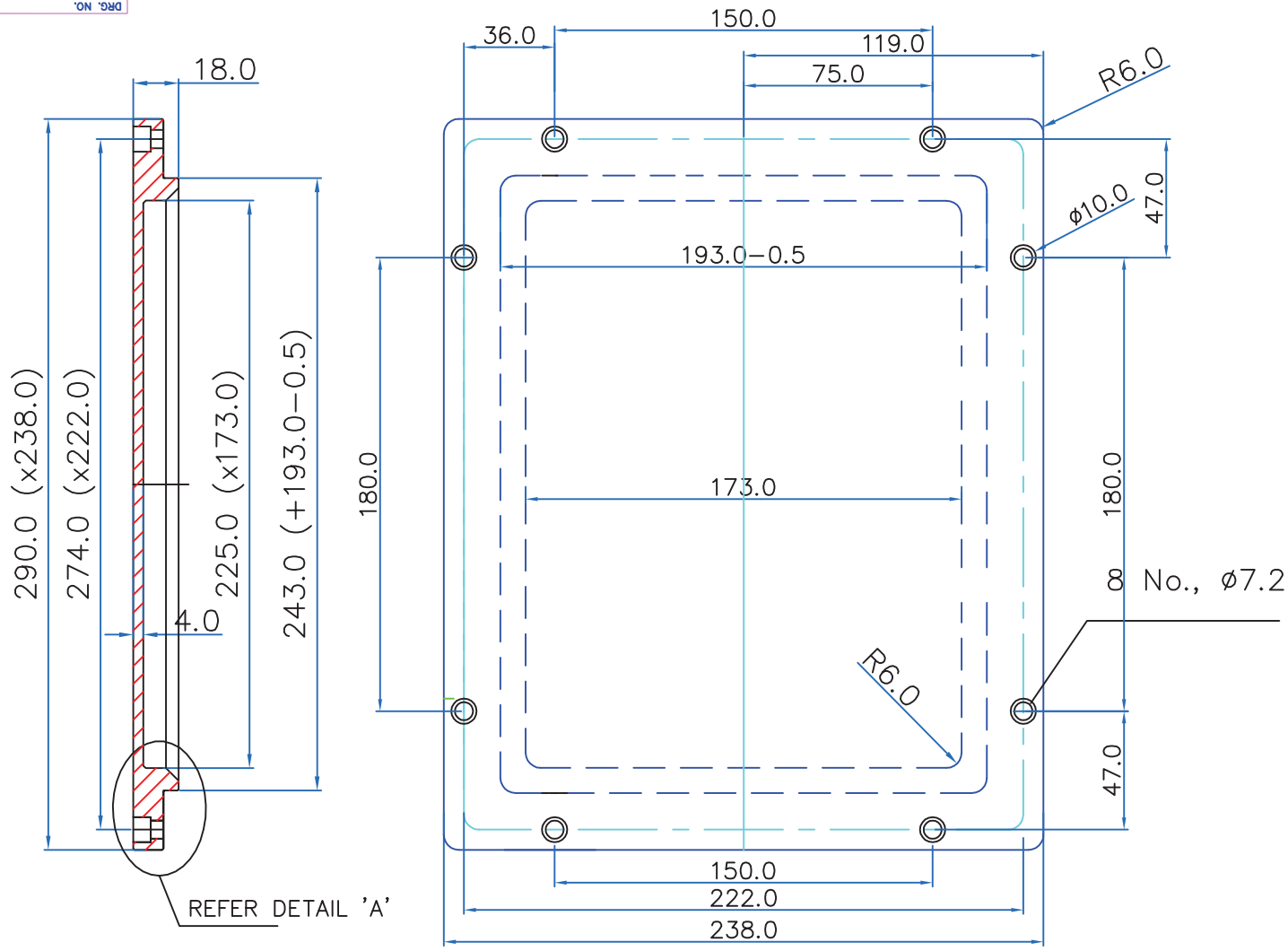

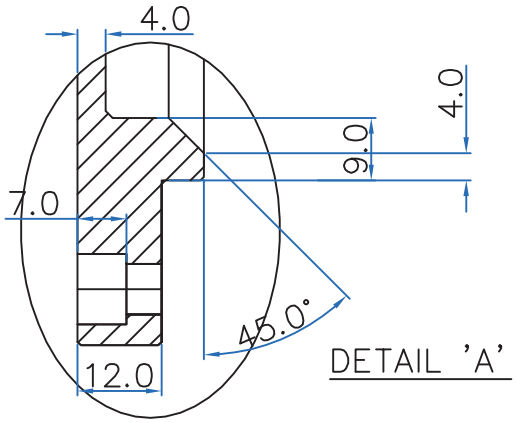

DETAIL 'A'

09/10/14

VAR.00	REMARKS	VAR NO.	ITEM NO.	DESCRIPTION	STD	DRAWING NO.	IT.NO. / VAR	MATL. CODE / MATL. SPECN.	A C	UNIT	UNIT WT. / QTY.
			01	TERMINAL BOX COVER				HE−30			01

TYPE OF PRODUCT

NAME OF CUSTOMER GSM−245

BHARAT HEAVY ELECTRICALS LTD. HYDERABAD

	NAME	SIGN.	DATE
DRN	Mintoo		19.07.14
CKD	MMRAO		19.07.14
APPD	MMRAO		19.07.14

REV.	DATE	ALTERED / CHECKED	REV.	DATE	ALTERED / CHECKED
ZONE			ZONE		

DEPT. / CODE | GRADE OF TOL. DIM. C/M/F | SCALE NTS | WEIGHT(KG) 1.0 KG | REF. TO RD DG 4 35 0618 0113 | ITEM NO. 1

TITLE: TERMINAL BOX COVER

CARD CODE

DRAWING NO. RD DG 4 35 0618 0113C

SHEET NO. | NO. OF SHEETS