(ALL DIMENSIONS ARE IN mm)

THE INFORMATION ON THIS DOCUMENT IS THE PROPERTY OF BHARAT HEAVY ELECTRICALS LIMITED
IT MUST NOT BE USED DIRECTLY OR INDIRECTLY IN ANY WAY DETRIMENTAL TO THE COMPANY'S INTEREST

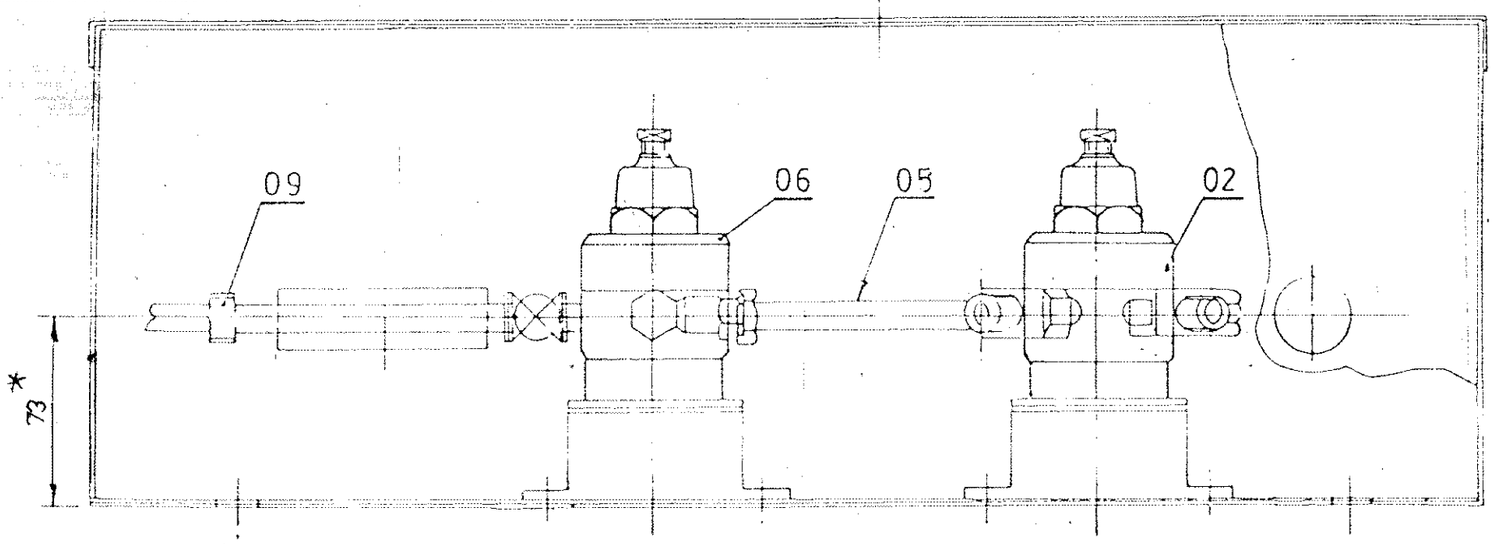

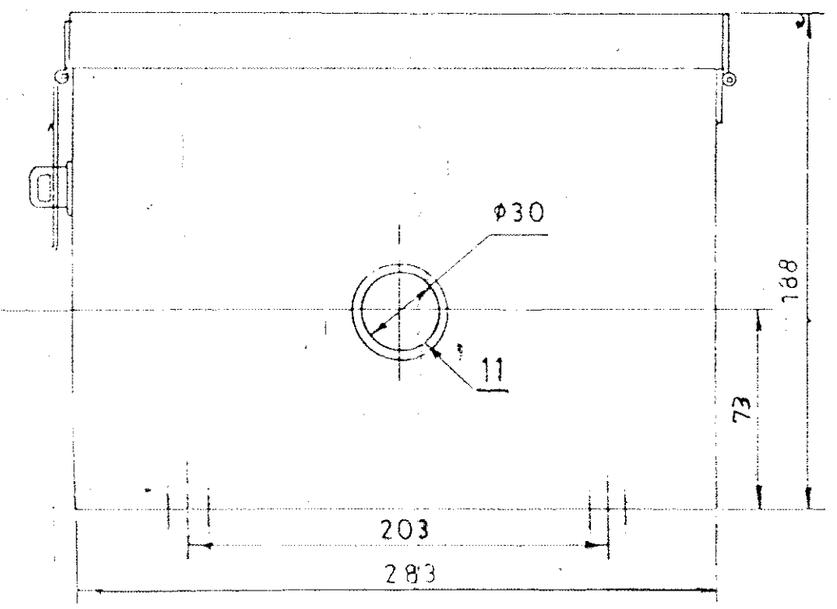

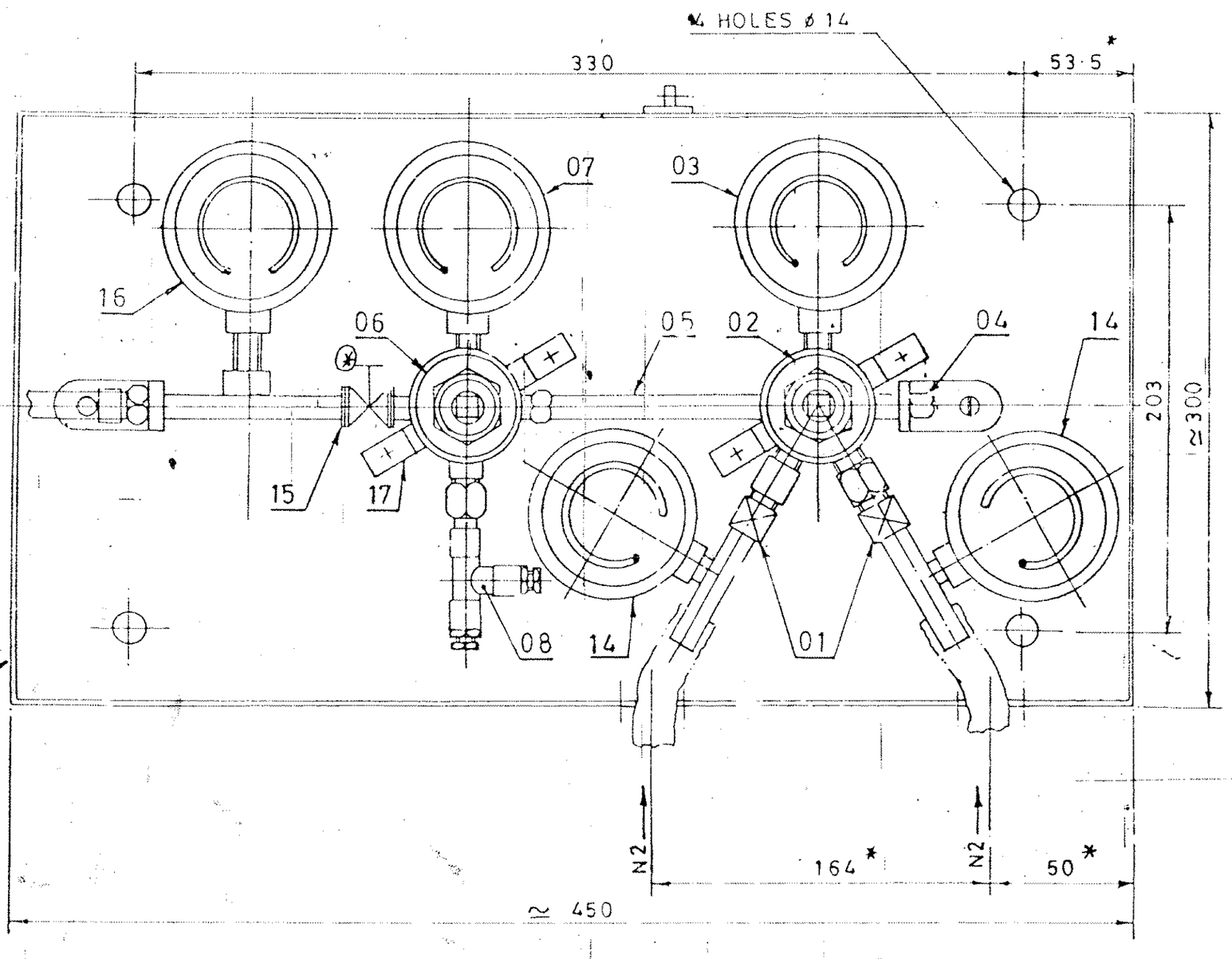

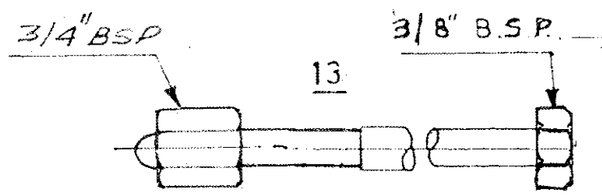

3/16"X 5/16" X 800 MM LONG COPPER TUBE (ANNEALED)

1/4" B.S.P. SWIVEL TYPE CONNECTION

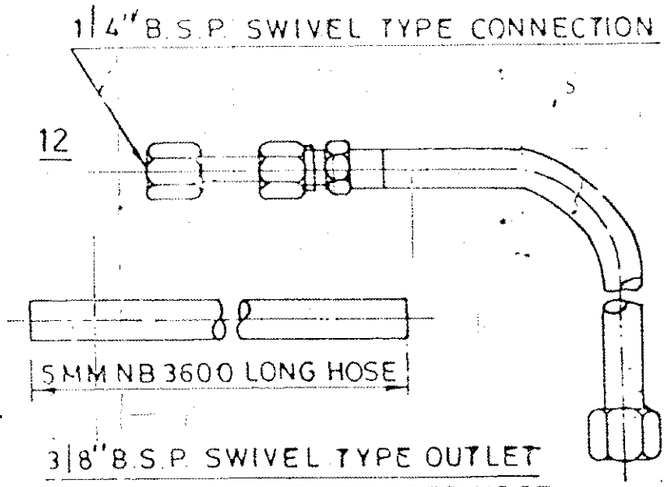

3/8" B.S.P. SWIVEL TYPE OUTLET CONNECTION WITH RUBBER HOSE

3/8" B.S.P. SWIVEL TYPE

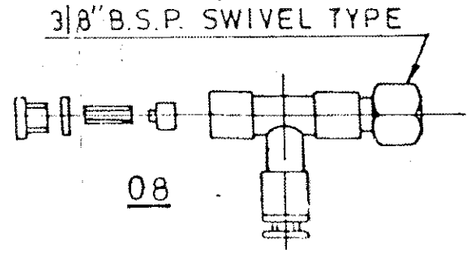

NOTES :—

1. THE REGULATOR IS REQUIRED FOR USE WITH TWIN NITROGEN CYLINDERS WHICH ARE CONNECTED TO TRANSFORMER DURING TRANSIT.
2. THE REGULATOR IS REQUIRED TO AUTOMATICALLY MAINTAIN A POSITIVE PRESSURE OF 0.15 TO 0.175 KG/CM² INSIDE THE TRANSFORMER & TO REGULATE TO ALLOW N2 GAS FROM CYLINDERS TO MAINTAIN POSITIVE PRESSURE i.e IN CASE PRESSURE FALLS BELOW 0.15 KG/CM² IN THE TRANSFORMER DUE TO LEAKAGE/TEMPERATURE VARIATION THE REGULATOR SHALL AUTOMATICALLY ALLOW ADDITIONAL GAS FROM CYLINDER TO BUILD UP REQUIRED PRESSUR IN TRANSFORMER.
3. REGULATOR SHALL BE SUPPLIED WITH L.P. & HP. GAUGE AND HIGH PRESSURE (COPPER TUBE) AND LOW PRESSURE (RUBBER/NYLON TUBE OF SUITABLE QUALITY) HOSES.
4. REGULATOR SHALL BE SUPPLIED WITH BUILT IN N.R.V.S. AND SAFETY VALVE PRESSURE GAUGES ETC FIRST AND SECOND STAGE REGULATORS AS SHOWN.
5. REGULATOR SHALL BE SUPPLIED IN SUITABLE STEEL BOX WITH LOCKING ARRANGEMENT TO AVOID PILFERAGE DURING TRANSIT. BOX SHALL BE PAINTED WITH TWO COATS OF ANTI CORROSIVE PRIMING PAINT INSIDE & OUTSIDE FOLLOWED BY TWO COATS OF WHITE PAINT INSIDE AND TWO COATS OF FULL GLOSSY FINISHING PAINT OF LIGHT GREY SHADE OUTSIDE.
6. GAUGES SHALL GENERALLY CONFORM IS 3624.
7. DIMENSIONS MARKED * MAY VARY ON ASSEMBLY.
8. TESTING
   i) EACH REGULATOR SHALL BE TESTED FOR FUNCTIONAL TEST AND AFTER BLANKING OUTLET CONNECTION (12) FOR LEAK PROOFNESS WITH N2/AIR AT 0.5 KG/CM² FOR 12 HOURS.
   ii) L.P. & H.P. HOSES SHALL BE TESTED WITH N2/AIR AS MENTIONED BELOW.
   a) H.P. HOSES AT 140 KG/CM² FOR 15 MTS.
   b) L.P. HOSES AT 0.7 KG/CM² FOR 15 MTS.
   iii) T.C. FOR EACH REGULATOR BEARING SL. NO. & FOR HOSES SHALL BE FURNISHED.

STYLE LIST

ST 627287	N2 GAS REGULATOR

S.NO	DESCRIPTION	QTY
17	SUPPORT	2
16	PRESSURE GAUGE 65MM. DIAL 1/4 NPT (FOR READING TRFR. PRESSURE)	1
15	VALVE (NORMALLY OPENED)	1
14	INLET PRESSURE GAUGE	2
13	INLET CONNECTION 800 MM LONG COPPER TUBE (ANNEALED)	2
12	OUTLET CONNECTION (BRASS)	1
11	RUBBER GROMET	1
10	M.S. BOX (SHEET TK. 1 MM)	1
09	3/8" B.S.P. OUTLET CONNECTION (BRASS)	1
08	L.P. DOUBLE SAFETY (ADJUSTABLE) VALVE SET AT 0.35 KG/CM²	1
07	L.P. GAUGE 0 TO 1 KG/CM² 65 MM DIAL 1/4" NPT	1
06	L.P. REGULATOR 2ND STAGE	1
05	CONNECTING LINK ASSEMBLY	1
04	H.P. SAFETY VALVE	1
03	H.P. GAUGE 0 TO 10 KG/CM² 65 MM DIAL 1/4 NPT	1
02	H.P. REGULATOR 1ST STAGE 200 KG/CM²	1
01	INLET CUM N.R.V. 3/8" B.S.P. (R.H.M.)	2

SPECIAL NOTE TO SHOP :—

FOR READING PRESSURE IN TRANSFORMER TANK FOLLOW THE FOLLOWING :

1. CLOSE VALVE MARKED THUS (*).
2. WAIT FOR 8 TO 10 MINUTES TO ATTAIN BACK PRESSURE.
3. READ TANK PRESSURE IN ITEM 16.

ADDITIONAL INFORMATION: STD.

STATUS OF DRAWING

DISTRIBUTION OF PRINTS: TRE TRP BAY-8 BAY-9 / 1 1 2 4

उत्पाद का प्रकार या ग्राहक/परियोजना का नाम
TYPE OF PRODUCT OR NAME OF CUSTOMER / PROJECT: TRANSFORMER

भारत हेवी इलेक्ट्रिकल्स लिमिटेड झाँसी
BHARAT HEAVY ELECTRICALS LTD. JHANSI

	नाम / NAME	हस्ता. / SIGN	दि. / DATE
बनाया DRN.	MANISH.S		21.12.99
जाँचा CKD.	J.S.KUNTIA		21.12.99
स्वीकृत APPD.	T.K.GANGUL		21.12.99

विभाग DEPT. TRE; कोड CODE 406; अन. टाल. नाप की श्रेणी UNTOL. DIMS. GR.; अनुपात SCALE; भार (कि. ग्रा.) WEIGHT (K.G.)

शीर्षक / TITLE: MODIFIED SPECIFICATION OF N2 GAS REGULATOR

असे. ड्राईंग का संदर्भ REF. TO ASSY. DRG.: 1 499 88 00001

पद. क्र. ITEM NO.; पद. की संख्या NO. OF ITEM; सं. की संख्या NO. OF VARI.

ड्राईंग क. / DRAWING NO.: 2 499 88 00017

सं. REV.: 1A

पृष्ठ क. / SHT. NO.: 1; पृष्ठों की सं. / NO. OF SHT.: 1

REV	DATE	ALTERED / CHECKED / APPROVED	REMARKS
1A	7.1.04	ALT. AKG / APPD.	NOTE NO. 8(i) MODIFIED.
01	24.4.02	ALTERED Sd / CHECKED Sd / APPROVED Sd	SERIAL NO. 12 MODIFIED. AKG 3/3/03
B	4.10.2000	ALTERED / CHECKED / APPROVED	STYLE LIST ADDED.
A	11.2.2000	ALTERED AKG / CHECKED / APPROVED	DRG. CONVERTED INTO JHANSI ORIGINAL.

A2 SIZE