FIRST ANGLE PROJECTION (ALL DIMENSIONS ARE IN mm)

REV.	DATE	ALTERED / CHECKED	REV.	DATE	ALTERED / CHECKED

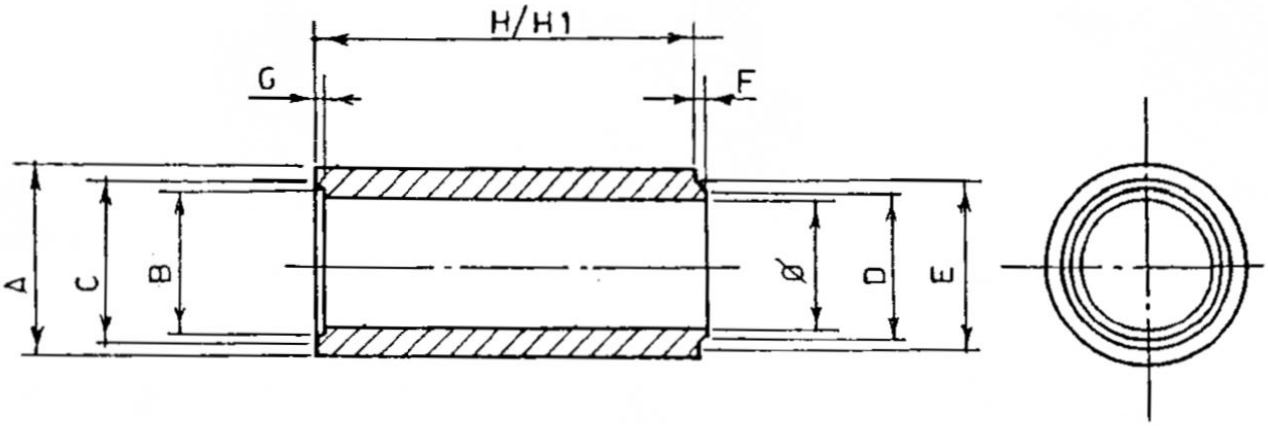

SAP Drawing No.	Rev No.
4-39999-40899	00

S NO.	Φ	A	B	C	D	E	F	G	H	(A-Φ)/2	SECTION Cm^2	VOL. Dm^3	H1	VOL1
1	80	110	95	97	93	95	6	5	200	15	50.3	0.896	100	0.45
2	90	125	107	110	104	107	8	7	300	17.5	63.6	1.774	100	0.59
3	100	140	120	123	117	120	8	7	300	20	78.5	2.262	100	0.754
4	120	165	142	145	139	142	8	7	300	22.5	113.1	3.023	100	1.01
5	150	200	175	178	172	175	8	7	300	25	176.7	4.126	100	1.71

TOLERANCE: ±2% OR ±2mm WHICHEVER IS GREATER

MATERIAL: HIGH HEAT DUTY FIRE CLAY AS PER SPEC NO: AA 53304, TYPE 'B'

REMARKS	ITEM NO	DESCRIPTION	STD	MATL. CODE / MATL. SPEN.	A/C	UNIT	UNIT Wt. / QTY.

BHARAT HEAVY ELECTRICALS LTD.
HYDERABAD

	NAME	SIGN.	DATE	NO.OF VAR.
DRN.	ARPANA.K	Arpana	09.09.11	-NA-
CHD.	V.L.NATH		09.09.11	
APPD.	M.N.A		09.09.11	

DEPT.	UNTOL. DIM. GR.	SCALE	WEIGHT(KG)	REF. TO ASSY DRG.	ITEM NO.	NO.OF ITEMS
F&P	Ø/M/∇	N.T.S		-NA-	-NA-	-NA-
CODE 204A						

TITLE: REFRACTORY SLEEVES (FOR STEEL CASTINGS)

CARD CODE: -NA-

DRAWING NO. 4-04-899 REV. 00

SHT No. 1 NO OF SHT. 1

GENERAL DIMENSIONAL LIMITS, FITS & TOLERANCES AS PER P.S: HY0230261

INVENTORY NO | SIGN. AND DATE | REF. DRG. 1

THE INFORMATION ON THIS DOCUMENT IS(: PROPERTY OF BHARAT HEAVY ELECTRICALS LIMITED
IT MUST NOT BE USED DIRECTLY OR INDIRECTLY IN ANY WAY DETRIMENTAL TO THE INTEREST OF THE COMPANY