FIRST ANGLE PROJECTION

(ALL DIMENSIONS ARE IN mm)

DRG. NO 0-301-75-00016 SH. 37 OF 41

SECTION B-B

DIRECTION OF STEAM FLOW

2xZ COMMON TOLERANCE ZONE

⊥	0.05	B
⌰	0.05	

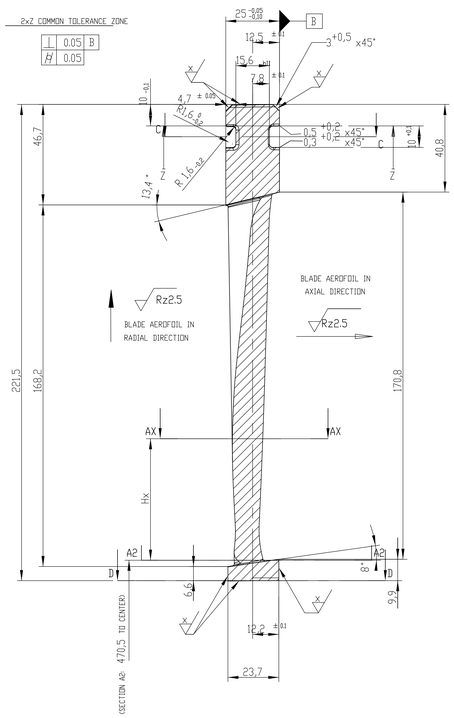

POS. NO.: 01

DESIGN "RIGHT"

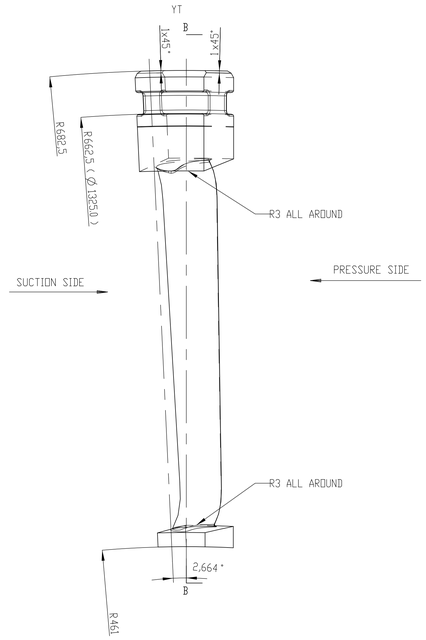

SCHEME FOR D AND S DIMENSIONS

*) REFERED TO ADJACENT BLADE

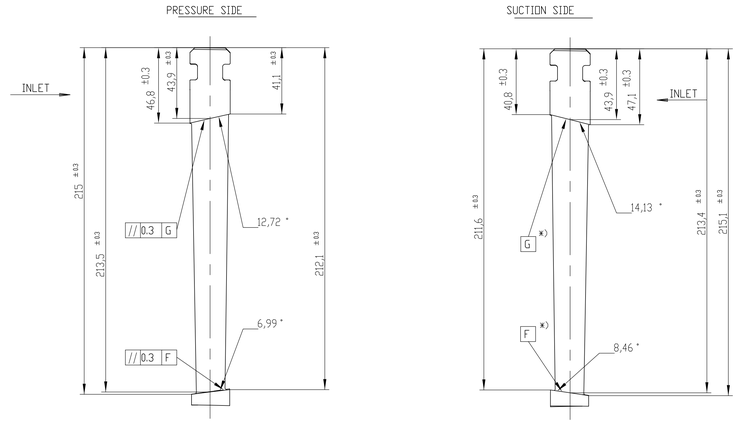

3.2 ALL OVER EXCEPT OTHERWISE STATED (x = Rz100 Rmax160 = 12.5 = Rz2.5 = 0.4 = Rz10 = 1.6)

DESIGN: "LEFT"

POS.NO: 01

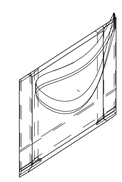

DESIGN: "RIGHT"

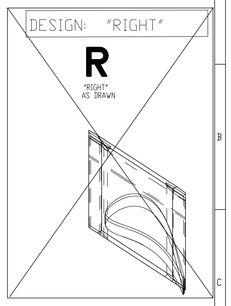

BLADE SHOWN IN DIRECTION OF STEAM FLOW

GUIDE BLADE AT JOINT PLANE (2 NO.) MADE BY REWORKING ON GUIDE BLADE(LEFT)

POS.NO : 02

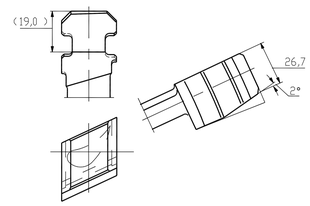

SECTION AX	Hx	Lges	AMI	UMA		RHk	BBi	D
A1 - A1	-10.0	22.66	8.38	11.02	0.12	52.47	7.30	
A2 - A2	0.0	23.14	8.55	5.84	0.12	52.25	7.46	
A6 - A6	12.0	23.72	8.76	2.82	0.13	52.00	7.64	
A31-A31	87.0	27.40	10.08	7.00	0.15	50.43	8.83	
A53-A53	153.0	30.69	11.23	10.97	0.16	49.04	9.89	

LOCAL SMALLEST RADIUS OF CURVATURE ON PRESSURE SIDE: 14.9 MM

JOINT BLADE AT PARTING PLANE (2 NO.) MADE BY REWORKING ON GUIDE BLADE(RIGHT)

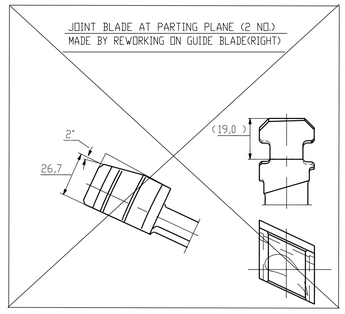

VIEW X

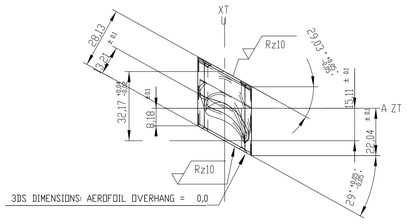

SECTION CC

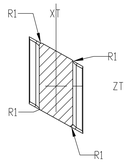

SECTION DD

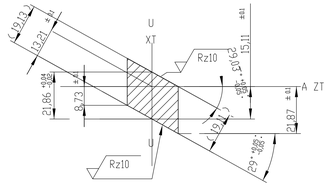

RAW PART IN POSITION OF CENTERING (WITHOUT SCALE)
(RELATED TO MINIMAL DIMENSIONS)

DESIGN: "LEFT"

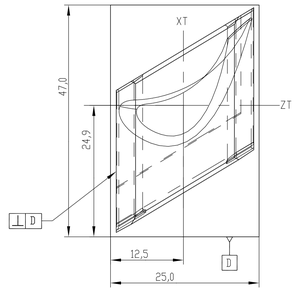

DESIGN: "RIGHT"

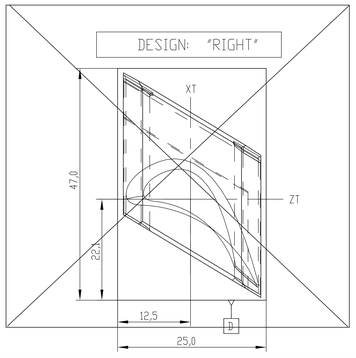

CENTRE DISTANCES IN SEMI-FINISHED CONDITION

TECHNICAL REQUIREMENTS

1. TOLERANCES:

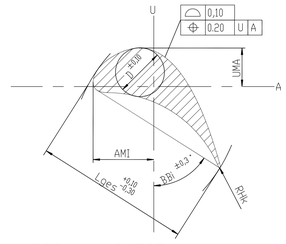

2. STRAK NUMBER: 80727
3. NUMBER OF BLADES/ROW: 134
(INCLUDING JOINT BLADES)

37(LEFT)	37
ROW NO.	VAR.

TYPE OF PRODUCT OR
NAME OF CUSTOMER/PROJECT

BHARAT HEAVY ELECTRICALS LTD
HYDERABAD

	NAME		DATE	NO.OF VAR.
DRN.	A HEMASUNDAR		22.03.2016	
CHD.	K THRIMURTHULU		22.03.2016	-NA-
APPD.	T.S.PRABHAKAR		22.03.2016	

DEPT.	UNTOL. DIMS.	SCALE	WEIGHT (KG)	REF. TO ASSY. DRG.	ITEM NO.	NO.OF ITEMS
ITB	OR C/M/F	NTS	0,467	-NA-	-NA-	-NA-
CODE 415						

TITLE GUIDE BLADE - LEFT

S-135-S25-TR222/171D2L

CARD CODE -

DRAWING NO. 0-301-75-00016 REV. 00

SHT. No 37 NO. OF SHT. 41

REV.	DATE	ALTERED CHD/APPD	ZONE

INVENTORY NO | STOR. AND DATE | REF. DRG. NO. | COMPUTER FILE NAME T-1161

GENERAL DIMENSIONAL LIMITS,FITS & TOLERANCES AS PER HY023026I

THE INFORMATION ON THIS DOCUMENT IS THE PROPERTY OF BHARAT HEAVY ELECTRICALS LIMITED. IT MUST NOT BE USED DIRECTLY OR INDIRECTLY IN ANY WAY DETRIMENTAL TO THE INTEREST OF THE COMPAY

Mar Thu 24 14:04 2016

Printed by : P SHASHANK-FM2301 / 6115381 on 18-05-16 16:27:53

This Drawing is printed from Engineering Digital Archive System (EDAS).
Therefore signatures are not essentially required.