FIRST ANGLE PROJECTION

(ALL DIMENSIONS ARE IN mm)

DRG. NO. 0-301-75-00016 SH. 38 OF 41

3.2 ALL OVER EXCEPT OTHERWISE STATED (X = Rz100 Rmax160 , 12.5 = Rz2.5 , 0.4 = Rz10 , 1.6)

SECTION B-B

POS. NO.: 01

DESIGN "RIGHT"

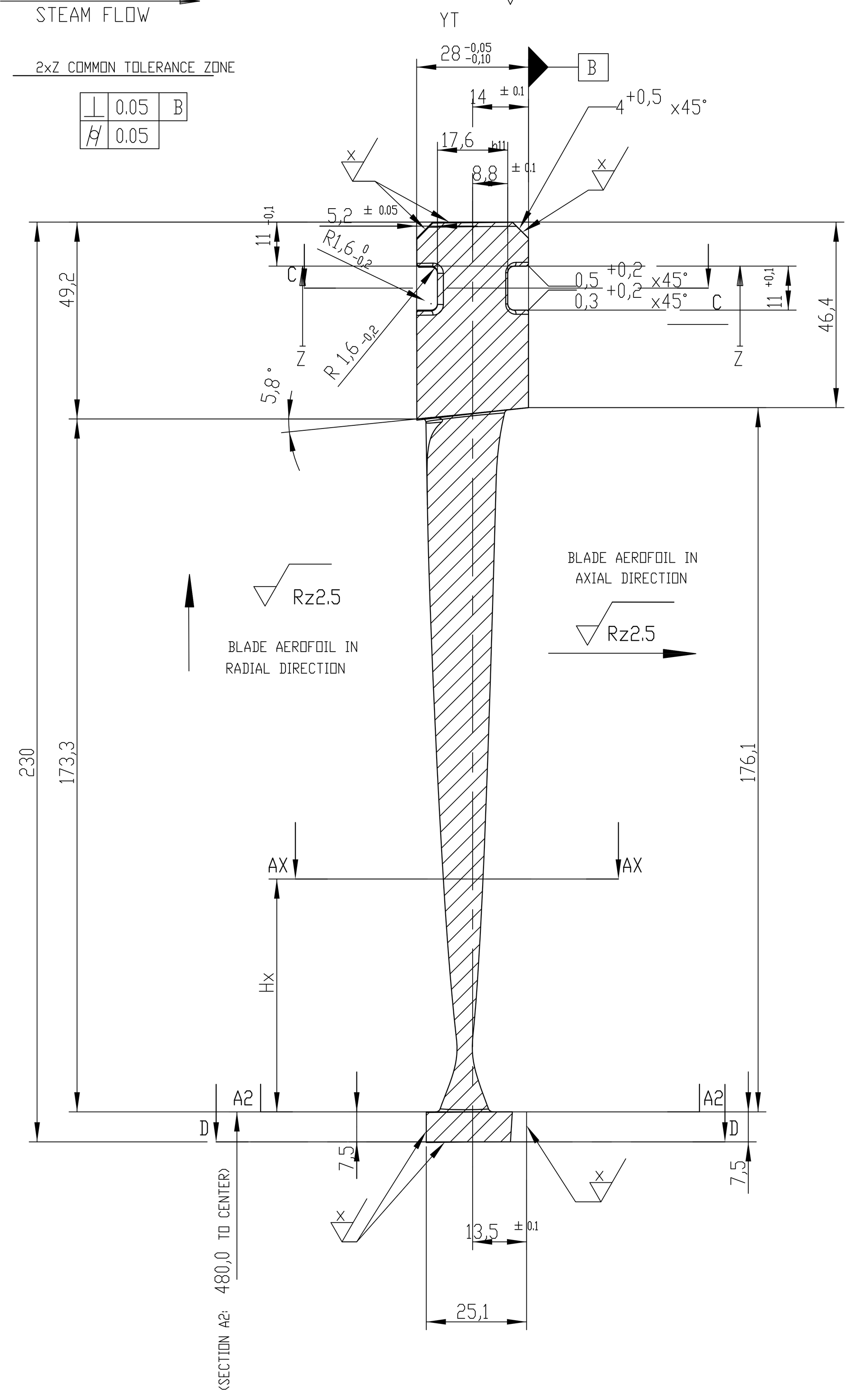

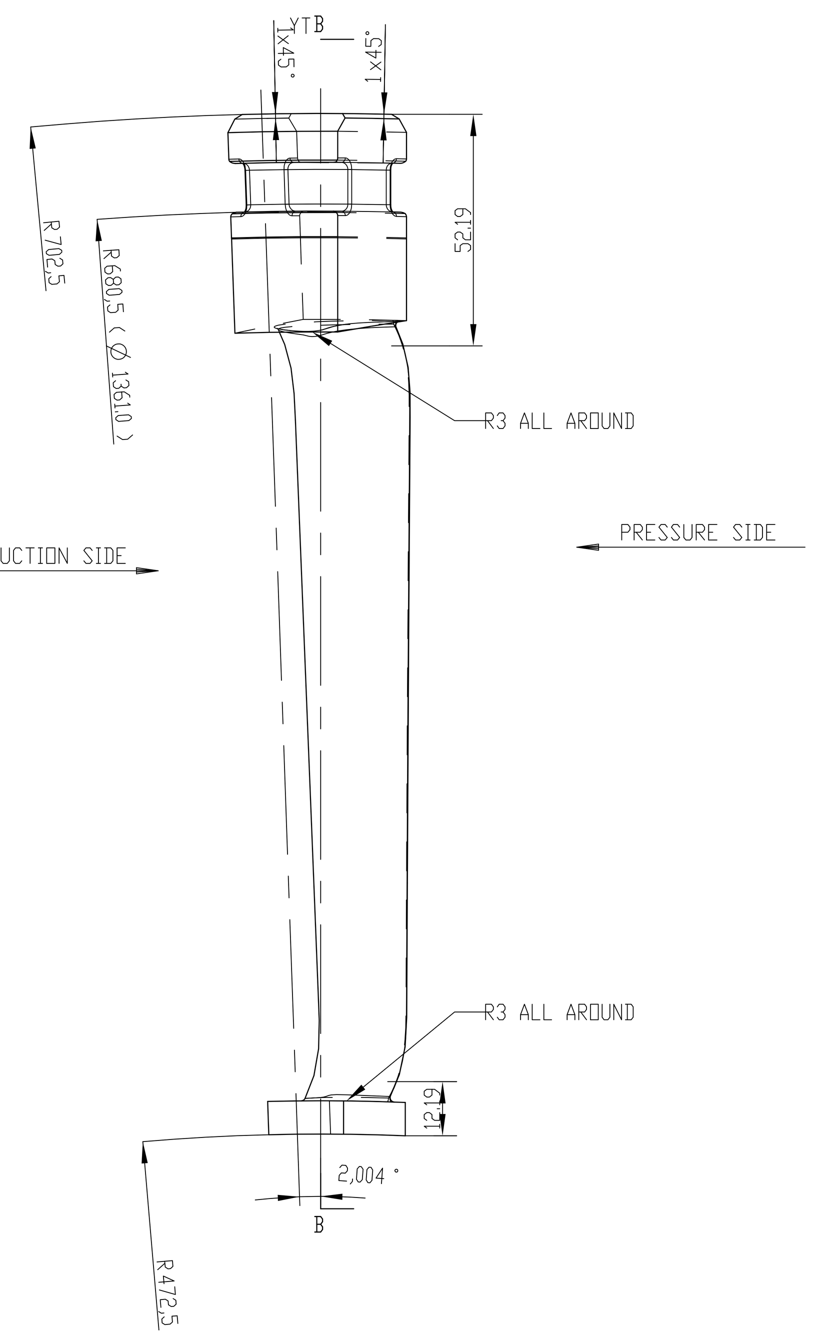

SCHEME FOR D AND S DIMENSIONS

*) REFERED TO ADJACENT BLADE

PRESSURE SIDE

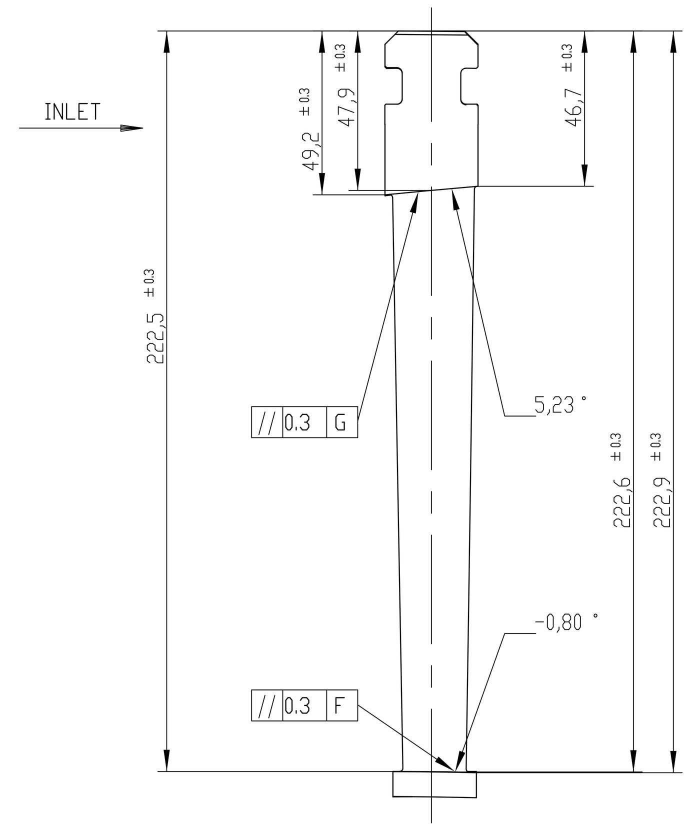

SUCTION SIDE

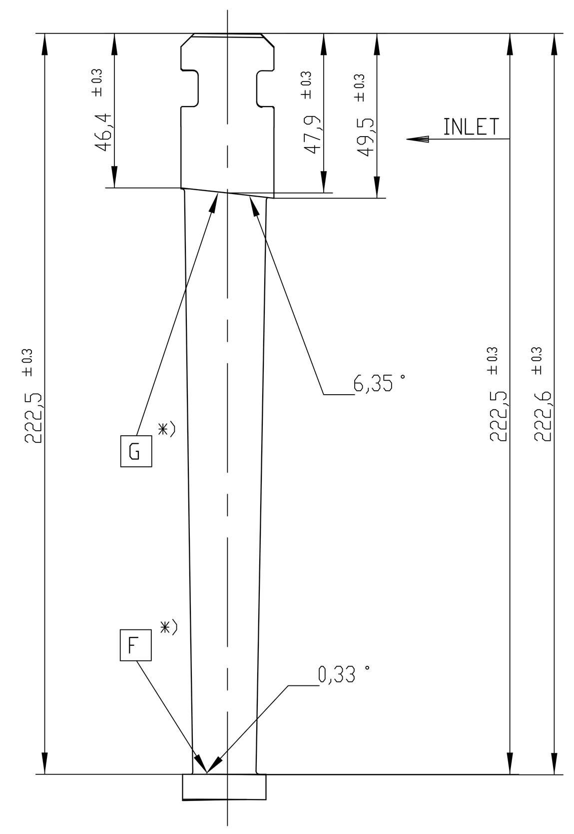

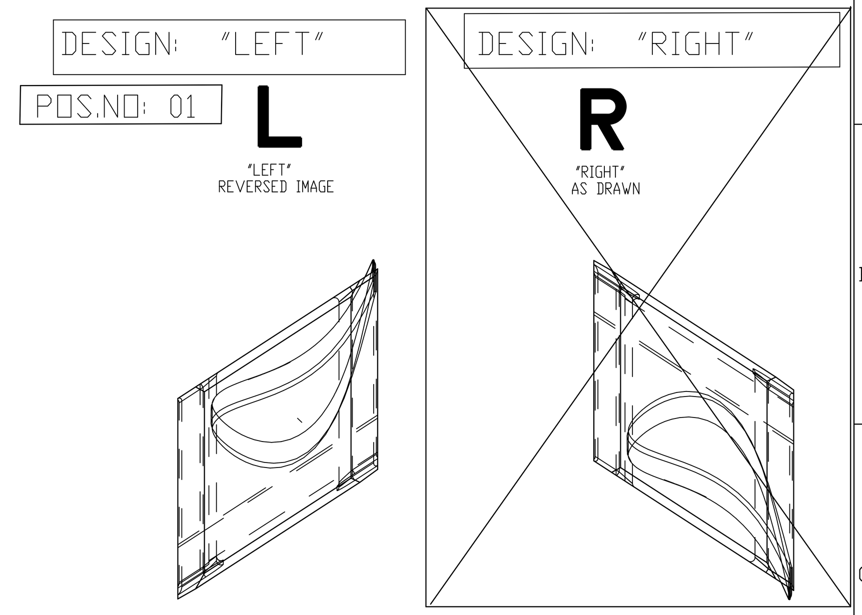

BLADE SHOWN IN DIRECTION OF STEAM FLOW

GUIDE BLADE AT JOINT PLANE (2 NO.)
MADE BY REWORKING ON GUIDE BLADE(LEFT)

POS.NO : 02

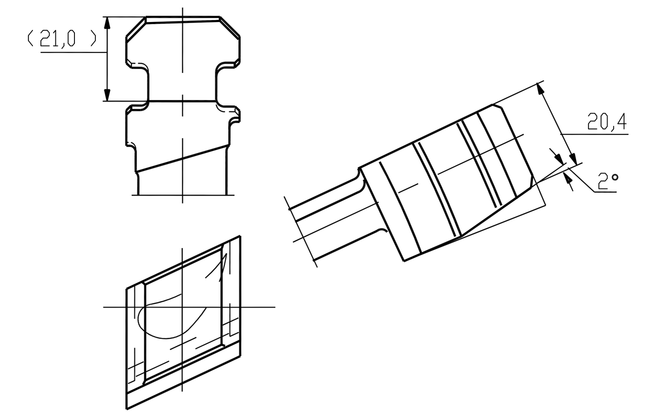

SECTION AX	Hx	Lges	AMI	UMA	RHk	BBi	D
A1 - A1	-10.0	23.67	8.40	9.18	0.13	54.17	7.63
A2 - A2	0.0	24.16	8.58	3.80	0.13	53.96	7.79
A6 - A6	12.0	24.75	8.80	0.43	0.13	53.72	7.98
A31-A31	87.0	28.49	10.15	3.04	0.15	52.15	9.18
A56-A56	162.0	32.31	11.50	6.22	0.16	50.54	10.41

LOCAL SMALLEST RADIUS OF CURVATURE ON PRESSURE SIDE: 15.5 MM

JOINT BLADE AT PARTING PLANE (2 NO.)
MADE BY REWORKING ON GUIDE BLADE(RIGHT)

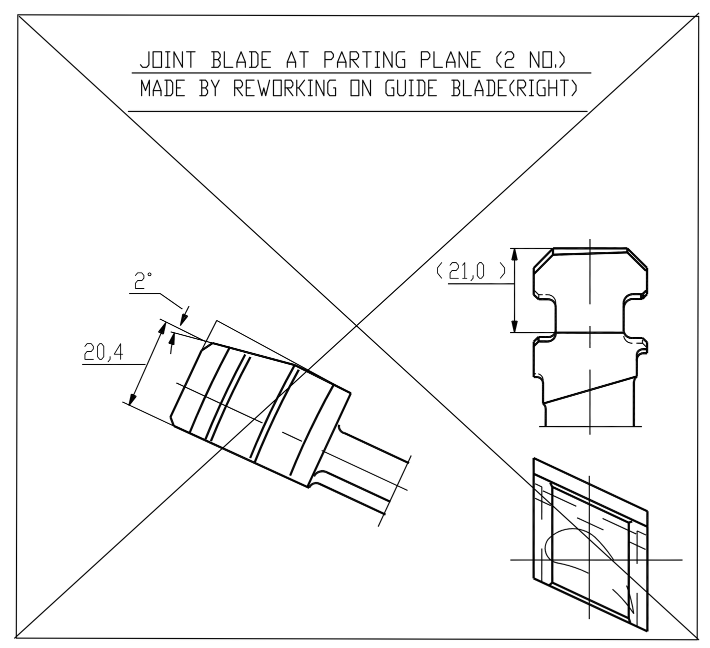

VIEW X

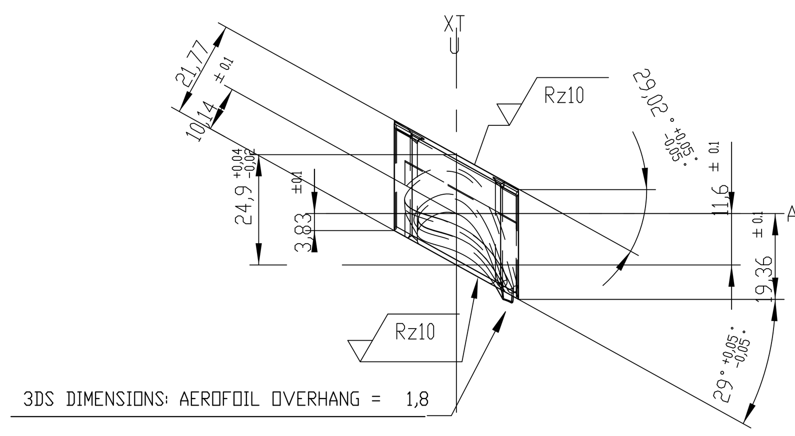

SECTION CC

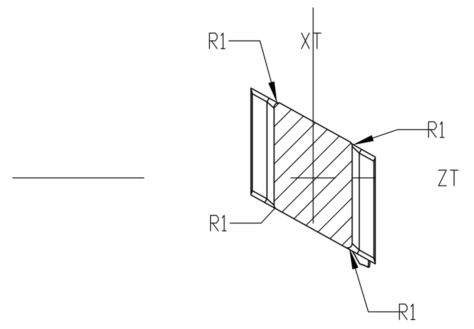

SECTION DD

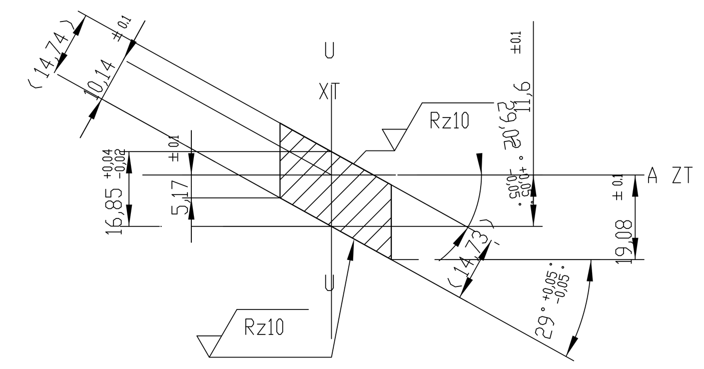

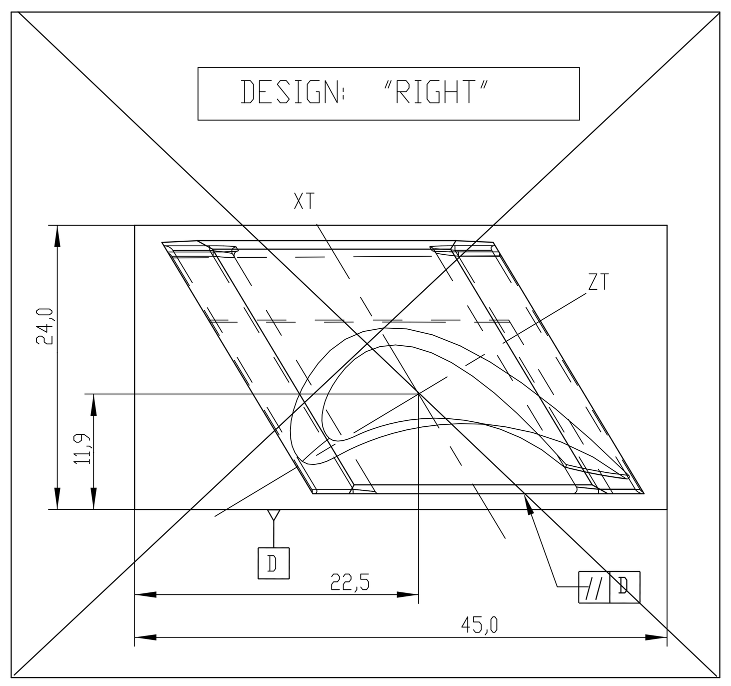

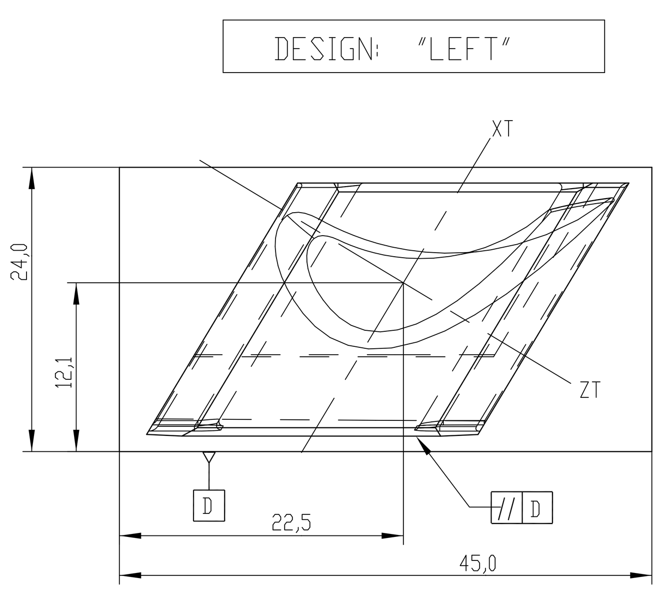

CENTRE DISTANCES IN SEMI-FINISHED CONDITION

TECHNICAL REQUIREMENTS

1. TOLERANCES:

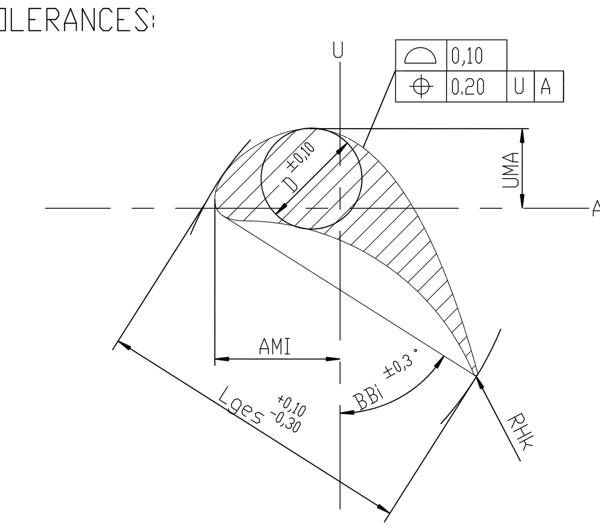

2. STRAK NUMBER: 80728
3. NUMBER OF BLADES/ROW: 178
(INCLUDING JOINT BLADES)

38(LEFT)	38
ROW NO.	VAR

TYPE OF PRODUCT OR NAME OF CUSTOMER/PROJECT

BHARAT HEAVY ELECTRICALS LTD. HYDERABAD

	NAME	SIGN.	DATE
DRN.	A HEMASUNDAR		22.03.2016
CHD.	K THRIMURTHULU		22.03.2016
APPD.	T.S.PRABHAKAR		22.03.2016

NO.OF VAR. -N.A-

DEPT.	UNTOL. DIMS. GR.		SCALE	WEIGHT (KG)	REF. TO ASSY. DRG.	ITEM NO.	NO.OF ITEMS
I.T.D / CODE 415	C/M/F		NTS	0,469	-N.A-	-N.A-	-N.A-

TITLE GUIDE BLADE - LEFT

S-135-S28-TR230/176E2S

CARD CODE -

DRAWING NO. 0-301-75-00016 REV. 00

SHT. No 38 NO. OF SHT. 41

REV.	DATE	ALTERED	CHD/APPD	ZONE

THE INFORMATION ON THIS DOCUMENT IS THE PROPERTY OF BHARAT HEAVY ELECTRICALS LIMITED. IT MUST NOT BE USED DIRECTLY OR INDIRECTLY IN ANY WAY DETRIMENTAL TO THE INTEREST OF THE COMPAY

GENERAL DIMENSIONAL LIMITS,FITS & TOLERANCES AS PER HY0230261

COMPUTER FILE NAME T-1161

REF. DRG. NO.

SIGN. AND DATE

INVENTORY NO

Mar Mon 28 13:26 2016

Printed by : P SHASHANK-FM2301 / 6115381 on 18-05-16 16:27:56

This Drawing is printed from Engineering Digital Archive System (EDAS).
Therefore signatures are not essentially required.