BHARAT HEAVY ELECTRICALS LTD.

(TRANSMISSION BUSINESS GROUP)

TERMS AND CONDITIONS FOR INDIGENOUS TENDER ENQUIRY

This Format is to be submitted in original duly signed by bidder. Deviation, if any, is to be brought out clearly in Schedule of Commercial Deviation giving clause-wise deviation. Any condition / clarification / deviation mentioned elsewhere may not be accepted.

Sr. No.	Standard Terms & Conditions FOR RATE CONTRACT OF EARTHING MATERIAL ENQUIRY NO. 235R284 DATED 08 – JANUARY - 2016 DUE ON 05 – FEBRUARY - 2016
1.	**INSTRUCTION TO BIDDERS:** a) Sealed quotations are invited for the items mentioned in the enquiry. Quotations should be typed and free from over writing and erasures. Corrections or additions must be clearly written both in words and figures and attested, otherwise offer shall be liable for rejection. b) **The tenders are invited and evaluated online through e-Procurement System. The bidder shall submit his response through bid submission to the tender on e-Procurement platform at https://bheleps.buyjunction.in.** **Foreign and indigenous vendors participating through open tenders/limited tender (Through E-procurement system) will necessarily have to buy Class-III digital certificates (DSCs) issued by certifying agencies in India.** **Procedure of getting obtaining DCSs can be down loaded from Important Links on link http://www.bhel.com/tender/tender_home.php or may be obtain from concern executive through email request.** Successful bidder shall be responsible for completion of the contract in all respects. Techno commercial offers shall be opened through the E-Procurement portal. However this tender may be finalized through online Reverse Auction. Bidders are request to quote their most competitive prices through the online e-procurement portal / system. In case of any difficulty in operating the E-Tendering System, please call up our developer's Help Desk m Junction Services Ltd. at 033-6601 1717 or BHEL representative. Please ensure the submission of your most competitive offer before the due date in the E-Tendering Portal to avoid last minute hustle. c) Bids are to be submitted in Two parts: i) Techno-commercial bid (Part-I): A copy of price bid (Part-II) "without prices" is also to be enclosed in Part-I bid. ii) Bidder to strictly ensure submitting the price bids in BHEL format. iii) Price bid (Part-II): To be submitted only in one copy separately. This should not contain any Technical or Commercial Terms. The rates should be quoted both in figures and words. In case of any difference between figures and words, the quoted

rate in words shall prevail over figure. Further in case of difference between unit rate & total price, unit rate in words shall prevail over total price.

d) **For any Technical Clarification, please contact:**

SHRI DILEEP KUMAR SHUKLA, DY. MANAGER / TBEM
SHRI DIPAK KUMAR MANDAL, DGM / TBEM
BHARAT HEAVY ELECTRICALS LIMITED
TRANSMISSION BUSINESS GROUP
TOWER A, 5TH FLOOR, ADVANT NAVIS IT BUSINESS PARK,
PLOT NO-7, SECTOR-142, EXPRESSWAY NOIDA,
NOIDA-201305,
DISTT- GAUTAM BUDH NAGAR, UP, INDIA
Phone : 0120-06748533, 8134
E-mail : dkshukla@bhel.in; dipak.mandal@bhel.in

For any Commercial Clarification, please contact:

SH. S.C. SHIVHARE, Sr. MGR.(TBMM) /
HIMANSHU KANASKAR, DY. MANAGER (TBMM)
BHARAT HEAVY ELECTRICALS LIMITED
TRANSMISSION BUSINESS GROUP
TOWER A, 5TH FLOOR, ADVANT NAVIS IT BUSINESS PARK,
PLOT NO-7, SECTOR-142, EXPRESSWAY NOIDA,
NOIDA-201305,
DISTT- GAUTAM BUDH NAGAR, UP, INDIA
Phone : 0120-6748532 / 0120-6748471
Email: kanaskar@bhel.in / scshivhare@bhel.in

e) Price bid should not contain any information / description / terms & condition other than given in Part-I of the bid except prices, otherwise bid is liable for rejection.

f) Price bid submitted along with the bid shall remain valid up to validity of offer. Unsolicited Supplementary / Revised price bid submitted during validity period of offer, unless asked by BHEL, shall not be considered. With-drawl of quotation by the bidder, at any stage after its opening, may entail blacklisting of vendor.

g) Authorized signatory should authenticate tender documents. Documents submitted with the offer shall be signed and stamped in each page by authorized representative of the bidder.

f) Enquiry shall also be uploaded in the CPP portal.

2. PRICES:

A. Prices shall be FIRM.

B. The prices shall be quoted by the vendors considering Sl. No. B1 and B2 below:

B1. On Domestic Basis.

B2. For Deemed Export, Physical Export & Mega Power Projects (BHEL shall provide necessary Documents for availing ED exemption & duty drawback benefits for Deemed Export, Physical Export & Mega Power Projects)

C. The prices are to be quoted on Ex-works basis. The break-up of prices shall be as under : -

a) **Ex-works Price**: Ex-Works price including packing & forwarding Charges.

b) **Excise Duty**: ED as applicable is to be quoted extra as percentage in both un-priced and price bid. (In the event bidder is exempted from ED, the same to be maintain throughout the Rate Contract period)

c) **Sales Tax**: ST / VAT / CST (against C form) as applicable to be quoted extra as percentage in un-priced and price bid. In case of inter-state sale-in-transit supplier/vendor will have to provide E1/E2 form.

d) **Entry tax / Octroi Charges**: Any Entry tax / Octroi applicable at destination / destination state shall be paid extra on proof of such payment.

e) **Freight & Insurance**: 1. Freight and Transit Insurance for door delivery up to destination/store is to be quoted on Per Unit / 1000 KM basis.

[The L-1 of Rate Contract will be finalized during Rate Contract considering Transportation Rates evaluation on notional distance of 1000 kms. However, individual orders will be released considering actual distance from respective Vendor's works to Site.]

2. Uniform rate of freight will be paid for project situated anywhere in India i.e. irrespective of destination at hilly or non hilly area.

3. The distance for the purpose of freight admissibility shall be the shortest route as exhibited in the Motoring Guide of India (latest edition) .Wherever a particular station is not appearing in MGI, the distance calculated up to the nearest station available in MGI will be suitably increased/decreased based on information from other sources like railway website. In cases where distance cannot be increased / decreased using the railway website also then other websites like "mapmyindia" may be resorted to.

f) **Sea worthy Packing Rates**: For export project charges of Export/sea worthy packing as per BHEL specification, is to be quoted on per Meter or No. basis. Sea worthy Export packing will also be considered for evaluation, in cases where corresponding quantity /percentage is specified in BOQ as per Tender Enquiry.

Note: i) The purchase order shall be placed on Ex – Works basis.

"BHEL reserves the right to go for Reverse Auction (RA) instead of opening the sealed envelope price bid, submitted by the bidder. This will be decided after techno-commercial evaluation. All bidders to give their acceptance for participation in RA. Non-acceptance to participate in RA may result in non-consideration of their bids, in case BHEL decides to go for RA.

In case BHEL decides to go for Reverse Auction, only those bidders who have given their acceptance to participate in RA will be allowed to participate in the Reverse Auction. Those bidders who have given their acceptance to participate in Reverse Auction will have to necessarily submit 'online sealed bid' in the Reverse Auction. Non-submission of 'online sealed bid' by the bidder will be considered as tampering of the tender process and will invite action by BHEL as per extant guidelines in vogue."

(Further to above clause, please refer attached Annexure I for Terms & Conditions Of Reverse Auction Page 1 & 2)

RA guidelines is also on BHEL website (www.bhel.com)

Sr. No.	**Standard Terms & Conditions FOR RATE CONTRACT OF EARTHING MATERIAL ENQUIRY NO. 235R284 DATED 08 – JANUARY - 2016 DUE ON 05 – FEBRUARY - 2016**
3.	**<u>TERMS OF PAYMENT:</u>** 100 % Payment with Taxes, Duties, Freight & Insurance within 60 days (**45 Days for MSE vendor**) from the date of receipt of complete invoice with following documents in 3 sets (Original + 2 copies): - LR duly endorsed in the name of customer by BHEL site - Receipt of material on the attached format by BHEL site - Excise invoice (If Applicable) - Delivery Challan or Packing list (case wise) - Transit insurance certificate from under writers or Copy of Intimation of Transit Insurance duly endorsed by under writers - MICC - Guarantee Certificate - Copy of Performance Bank Guarantee. [A.] Documents to be furnished by vendor immediately after dispatch: - Copy of Invoice - Copy of LR - Copy of Delivery Challan / Packing List - Copy of Insurance Certificate - Copy of Guarantee Certificate [B.] Following Documents to be sent by vendor to TBG, BHEL : - LR duly endorsed in the name of customer by BHEL site - Receipt of material on the attached format by BHEL site - Excise invoice (If Applicable) - Delivery Challan / Packing list (case wise) - Transit insurance certificate from under writers or Copy of Intimation of Transit Insurance duly endorsed by under writers - Dispatch Clearance / MICC - Guarantee certificate - All Test & Inspection Reports
4.	**INTEREST LIABILITY:** In case of any delay in payment due to any reason, BHEL shall not pay any interest on delayed payment.
5.	**GUARANTEE:** The equipment / material shall be guaranteed for 18 months from the date of material receipt at destination or 12 months from the date of commissioning, whichever is earlier. The defective material / component shall be replaced free of cost at site.
6.	**PERFORMANCE BANK GUARANTEE:** A Contract Performance Bank Guarantee amounting equal to the value of 5% (Ex-work) of rate contract value shall be taken from the vendors who enter into rate contract against this Enquiry and the Contract Performance Bank Guarantee shall be valid till 1 year from the date of expiry of Rate Contract.
7.	**FINAL ENGINEERING DOCUMENTATION:** Not Applicable

Sr. No.	Standard Terms & Conditions FOR RATE CONTRACT OF EARTHING MATERIAL ENQUIRY NO. 235R284 DATED 08 – JANUARY - 2016 DUE ON 05 – FEBRUARY - 2016
8.	**INSPECTION:** BHEL / customer / third party shall inspect equipment / material before despatch. Stage inspection during manufacturing may also be carried out. Material to be despatched only after getting Despatch Clearance from BHEL. Supplier shall send inspection call on prescribed format or website only, with an advance notice of 15 days. Vendor shall forward all inspection and test reports for issue of MICC by BHEL. Road Permit Form request should also be given along with Inspection call.
9.	**DESPATCH DOCUMENTS:** Following despatch documents are to be immediately sent to purchaser on despatch: • Copy of Invoice and LR • Packing List (Case-wise) • Insurance Certificate
10.	**DELIVERY PERIOD:** Bidder to specify delivery period in weeks from the date of LOI/PO. Note: LR date or Invoice date whichever is later shall be considered as delivery date.
11.	**DELAYED DELIVERY:** In case of delay in execution of order beyond the lot wise contractual delivery, an amount of ½ % of total Ex-Works Value per week or part thereof subject to maximum of 10% of total Ex-Works Value of P.O. will be levied.
12.	**VALIDITY:** The offer shall be valid for 120 days from the due date of opening.
13.	**ACCEPTANCE / REJECTION OF TENDER:** BHEL reserves the right to reject in full or part, any or all tenders without assigning any reason thereof. BHEL also reserves right to vary the quantities mentioned in the tender.
14.	**EVALUATION:** The Evaluation basis is on total cost to BHEL separately for each of the following schedules “A”, “B” & “C”. Hence, 3 Vendors will be determined L-1, One each for Total Cost to BHEL for following schedules “A”, “B” & “C” : (i) Schedule “A” - GS Flat & MS Flat (Power Grid Projects i. e. Sl. No. A.1 & A.2 of Price Schedule “A”), (ii) GI Flat & GI Pipe Electrode (for Non PGCIL Project i.e. item Sl. No. B.1, B.2 & B.3 of Price Schedule “B”) and (iii) Cast Iron Pipe Electrode (for all Projects i.e. item Sl. No.- C.1, C.2, C.3 & C.4of price Schedule “C”) Comparative statement shall be prepared based on overall quantity basis for each

Sr. No.	Standard Terms & Conditions FOR RATE CONTRACT OF EARTHING MATERIAL ENQUIRY NO. 235R284 DATED 08 – JANUARY - 2016 DUE ON 05 – FEBRUARY - 2016
	schedule & L-1 will be dertemined for each schedule considering Ex-works Price , Packing & Forwarding Charges , Excise Duty , CST against form-C, F&I for 1000 Kms Distance and Seaworthy export packing charges as per Schedule of Prices.
15.	**DEVIATION :** The bids having deviation(s) w.r.t. tender are liable for rejection. However, BHEL, at its discretion, may load the prices for evaluation of offer as per Loading Criteria for identified deviations mentioned in clause No. 24.
16.	**ARBITRATION:** All cases of disputes emanating from and relating to this contract shall be referred to the sole arbitrator appointed by Unit Head / GM, BHEL. The arbitrator may be an employee of BHEL whether serving or retired or any other person nominated by Unit Head/GM BHEL. The arbitration shall be in accordance with 'The Arbitration and Conciliation Act 1996' and the rules there under as amended from time to time. The arbitrator shall give a reasoned award. The decision of the arbitrator shall be final & binding upon both the parties. The venue of arbitration shall be Delhi.
17.	**LEGAL SETTLEMENT:** All disputes shall be subject to jurisdiction of court situated in Delhi/New Delhi only. Notwithstanding contained herein anything in this NIT, the original exclusive jurisdiction shall remain of the court at Delhi / New Delhi.
18.	**SUBCONTRACTING :** In case further subcontracting of BHEL order or part thereof is envisaged by supplier, the same can be done after written permission is obtained from BHEL. However it shall not absolve the supplier of the responsibility of fulfilling BHEL purchase order requirements.
19.	**RISK PURCHASE:** In case the successful bidder fails to supply or fails to comply with the terms & conditions of the purchase order, BHEL reserves the right to source such material/ component / equipment/ system from any other agency at the risk and Cost to BHEL of the successful bidder.
20.	**ADJUSTMENT OF RECOVERY:** Any amount payable by the supplier / vendor under any of the condition of this contract shall be liable to be adjusted against any amount payable to the supplier / vendor under any other works / contract awarded to him by any BHEL unit. This is without prejudice to any other action as may be deemed fit by BHEL.
21.	**FORCE MAJEURE CONDITION:** Force Majeure will mean: Circumstances beyond the control of contracting parties such as but not limited to act of God, natural catastrophes, fire, war, embargo, industrial dispute, riot, civil commotion, restrictions etc. Vendors willing to plead force majeure shall inform its effect on fulfilment of contract and shall not be held responsible for non performance in such circumstances.
22.	**DEMURRAGE / WHARFAGE:** For the reasons of delay in receipt of documents from suppliers or due to the same being found to be incomplete, and/or faulty, the suppliers shall be responsible to reimburse in all demurrages / wharfages, if any, paid by BHEL (for stated reasons).

Sr. No.	Standard Terms & Conditions FOR RATE CONTRACT OF EARTHING MATERIAL ENQUIRY NO. 235R284 DATED 08 – JANUARY - 2016 DUE ON 05 – FEBRUARY - 2016
23.	**SPECIAL CONDITION:** Procurement will be from manufacturers only. Manufacturers should submit offers directly. However in case of involvement of any representative the details of the same along with the copy of the agreement should be submitted in the first part of the offer. Principal manufactures must ensure that the nominated representative do not represent any other manufacture for the same item.
24.	**LOADING CRITERIA FOR DEVIATIONS TAKEN BY BIDDER ON:** 24.1 : TERMS OF PAYMENT: If a bidder asks for payment within specified no. of days from the date of receipt of invoice with complete documents as per "Terms of Payment" at sr. No. 3 above, loading to be done as follows: a) Base rate of SBI (as applicable on the date of techno commercial bid opening) + 6 % shall be considered for loading for the period of relaxation sought by the bidder. b) 60 days - No loading 24.2 : DELAYED DELIVERY / PENALITY DUE TO DELAYED DELIVERY: Loading for not accepting this clause / accepting only on un delivered portion shall be the maximum amount specified in this clause.
25.	**QUANTITY VARIATION:** Quantity Variation will be +/- 30% during contract stage as well as completion of execution of individual orders.
26.	**TECHNICAL SPECIFICATION :** TB-235-509-125 Rev. 05
27.	**RATE CONTRACT VALIDITY /CONDITIONS :** a) The Rate Contract shall be Valid for 18 Months from the Date of award of the Rate Contract. All orders placed within the Rate contract Validity period have to be executed. b) Allotment of job to any Vendor would be sole prerogative of TBG, BHEL & no representation in this regard shall be entertained. However, generally the allotment will be based on following : i) Capability of vendor in meeting delivery schedule of BHEL. ii) Delivery performance of Vendor. iii) Delivery Capacity as available at the time of allotment. iv) L – 1 Vendor will be given preference. However, BHEL, TBG reserves its right of allotment to any Vendor, with whom Rate Contract is entered, to meet its delivery requirement. c) The Rate Contract is proposed to be entered with Two [02] Nos. of Vendors with the quantity distribution in the ratio of 70 & 30. 70 % quantity shall be awarded to original L1 vendor. The rates of Original L1 vendor shall be sequentially counter-offered to L2, L3, L4 and so on… in that sequence. The balance 30 % quantity shall be awarded to the L2 or L3 or L4 and so on.. bidder whoever accepts the rate of the original L1 bidder in that sequence. In case the other bidders do not accept the business at L1 rates, then order for 100 % business will be placed with the original L1 bidder. ***"However, Any actual distribution pattern cannot be committed as evaluation will be done when the delivery location becomes known. Evaluation for each destination shall***

be done on 'total cost to BHEL' basis and purchase order shall be placed accordingly on L1 vendor for the specific requirement".

"In case of Rate Contract, oredering shall be done with quantity in both numbers and notional weight. However, payment shall be made as per approved drawing/weight duly certified by BHEL."

28. **INTENDED BENEFITS FOR MSE SUPPLIERS:**

"MSE suppliers can avail the intended benefits only if they submit along with the offer, attested copies of either EM II certificate having deemed validity (five years from the date of issue of acknowledgement in EM II) or valid NSIC certificate or EM II certificate along with attested copy of a CA certificate (Format enclosed at Annexure -1 where deemed validity of EM II certificate of five years has expired) applicable for the relevant financial year (latest audited). Date to be reckoned for determining the deemed validity will be the date of bid opening (Part 1 in case of two part bid). Non submission of such documents will lead to consideration of their bid at par with other bidders. No benefit shall be applicable for this enquiry if any deficiency in the above required documents are not submitted before price bid opening. If the tender is to be submitted through e-procurement portal, then the above required documents are to be uploaded

29. **"The Bidder along with its associate/ collaborators/ sub-contractors/ sub-vendors/ consultants/ service providers shall strictly adhere to BHEL Fraud Prevention Policy displayed on BHEL website http://www.bhel.com and shall immediately bring to the notice of BHEL Management about any fraud or suspected fraud as soon as it comes to their notice."**

30. **PRE QUALIFYING CRITERIA FOR OPEN TENDER :**

1. PQR is as follows :

A) The bidder must be manufacturer of earthing material.

And

B) The bidder should have supplied at least 200 MT of required quantity in any one year in last five years from date of bid opening.

<u>Following 2 points a) & B) are applicable only for Schedule A - GS Flat & MS Flat (Power Grid Projects i. e. Sl. No. A.1 & A.2 of Price Schedule "A")</u>

a) The vendor/Manufacturer should be approved by POWERGRID as on date of Technical Bid opening and should have valid MQP of POWERGRID for Earthing Material, if applicable, as on date of Technical Bid opening.

b) Only PGCIL approved vendors shall be considered. Proof of PGCIL Registration to be submitted along with Techno-Commercial offer.

2. The Bidder should have Galvanising facility at their works."

3. The Financial Parameters for PRE QUALIFYING CRITERIA shall be :

(a)Vendors should have a minimum average annual Turnover of 150 lacs for last two financial years (2011-12, 2012-13, or 2013-14, 2014-15) and should submit audited balance sheet and Profit and Loss account statement for the same.

(b)Vendors should have earned profit in at lease one year during the last two years

	for which turnover has been considered. Supplier Evaluation team may also visit Works of Bidder for Assessment of Works.
31.	**REGISTRATION OF Non TBG – PMD Vendors :** Bidders, not registered with BHEL TBG,need to submit application for Assessment of Registration thorugh Online supplier registration portal at : www.bhel.com under supplier registration either before Date of Tender Opening or within One Week of Date of Tender Opening. PLEASE NOTE THAT UNLESS ONLINE VENDOR REGISTRATION IS APPLIED WITH IN PERIOD MENTIONED IN THIS CLAUSE, BIDS WILL NOT BE PROCESSED FURTHER. In case any clarifications are required by BHEL TBG, it should be furnished properly at the earliest but not later than 15 days from the date clarification is sought by BHEL. In case of non reply/improper reply, BHEL reserves the right to complete the Assessment based on available documents and decide acceptance or rejection of bid accordingly.

Seal of the bidder

Signature of the bidder

Annexure - I

Certificate by Chartered Accountant on letter head

This is to Certify that M/S ....., (hereinafter referred to as 'company') having its registered office at ..... is registered under MSMED Act 2006, (Entrepreneur Memorandum No (Part–II) ..... dtd:....., Category: ..... (Micro/Small)). (Copy enclosed).

Further verified from the Books of Accounts that the investment of the company as on date..... as per MSMED Act 2006 is as follows:

1. **For Manufacturing Enterprises:** Investment in plant and machinery (i.e. original cost excluding land and building and the items specified by the Ministry of Small Scale Industries vide its notification No.S.O.1722(E) dated October 5, 2006 :
   Rs.....Lacs
2. **For Service Enterprises:** Investment in equipment (original cost excluding land and building and furniture, fittings and other items not directly related to the service rendered or as may be notified under the MSMED Act, 2006:
   Rs.....Lacs

The above investment of Rs.....Lacs is within permissible limit of Rs.....Lacs for .....Micro / Small **(Strike off which is not applicable)** Category under MSMED Act 2006.

Date:

(Signature)

Name -

Membership number -

Seal of Chartered Accountant

Terms & Conditions of Reverse Auction

Against this enquiry for the subject item/ system with detailed scope of supply as per enquiry specifications, BHEL may resort to "REVERSE AUCTION PROCEDURE" i.e., ON LINE BIDDING (THROUGH A SERVICE PROVIDER). The philosophy followed for reverse auction shall be English Reverse (No ties).

1. For the proposed reverse auction, technically and commercially acceptable bidders only shall be eligible to participate.

2. Those bidders who have given their acceptance for Reverse Auction (quoted against this tender enquiry) will have to necessarily submit 'online sealed bid' in the Reverse Auction. Non-submission of 'online sealed bid' by the bidder for any of the eligible items for which techno-commercially qualified, will be considered as tampering of the tender process and will invite action by BHEL as per extant guidelines in vogue.

3. BHEL will engage the services of a service provider who will provide all necessary training and assistance before commencement of on line bidding on internet.

4. In case of reverse auction, BHEL will inform the bidders the details of Service Provider to enable them to contact & get trained.

5. Business rules like event date, time, bid decrement, extension etc. also will be communicated through service provider for compliance.

6. Bidders have to fax the Compliance form (annexure IV) before start of Reverse auction. Without this, the bidder will not be eligible to participate in the event.

7. In line with the NIT terms, BHEL will provide the calculation sheet (e.g., EXCEL sheet) which will help to arrive at "Total Cost to BHEL" like Packing & forwarding charges, Taxes and Duties, Freight charges, Insurance, Service Tax for Services and loading factors (for non-compliance to BHEL standard Commercial terms & conditions) for each of the bidder to enable them to fill-in the price and keep it ready for keying in during the Auction.

8. Reverse auction will be conducted on scheduled date & time.

9. At the end of Reverse Auction event, the lowest bidder value will be known on auction portal.

10. The lowest bidder has to fax/e-mail the duly signed and filled-in prescribed format for price breakup including that of line items, if required, (Annexure VII) as provided on case-to-case basis to Service provider within two working days of Auction without fail.

11. In case BHEL decides not to go for Reverse Auction procedure for this tender enquiry, the Price bids and price impacts, if any, already submitted and available with BHEL shall be opened as per BHEL's standard practice.

12. Bidders shall be required to read the "Terms and Conditions" section of the auctions site of Service provider, using the Login IDs and passwords given to them by the service provider before reverse auction event. Bidders should acquaint themselves of the 'Business Rules of Reverse Auction', which will be communicated before the Reverse Auction.

13. If the Bidder or any of his representatives are found to be involved in Price manipulation/ cartel formation of any kind, directly or indirectly by communicating with other bidders, action *as per extant BHEL guidelines*, shall be initiated by BHEL and the results of the RA scrapped/ aborted.

14. The Bidder shall not divulge either his Bids or any other exclusive details of BHEL to any other party.

15. In case BHEL decides to go for reverse auction, the H1 bidder (whose quote is highest in online sealed bid) may not be allowed to participate in further RA process.

BHARAT HEAVY ELECTRICALS LIMITED
TRANSMISSION BUSINESSS GROUP
MATERIAL RECEIPT CERTIFICATE

a) Site:
b) LR No. with date:
c) Vehicle no.:
d) Date of receipt of material at site:
e) Material details (as mentioned below):

S.no.	Item Description	Type of Packages	Unit (MT/KM/ NO.)	Qty as per packing list	Qty Received	Remarks

Other Remarks:

Signature with date: _____

Name & Designation: _____
(With Seal)

Important Remarks:

1. LR endorsement Format-
"LR no./ Date: _____ Endorsed in favour of (Customer Name) and the transporter is instructed to deliver the goods to (Site name)".

For Example-
LR no./ Date: 22126/ dt. 30/04/15
Endorsed in favour of TANTRANSCO and the transporter is instructed to deliver the goods to TANTRANSCO, Anikadavu substation.

(sign and stamp with name & designation)

2. LR will only be endorsed as per the given Format and strictly not be receipted.

3. Material receiving will only be given through the MRC (Format attached).

This sample checklist is only for the benefit of prospective bidders/ suppliers to obtain Class-III, SHA2 2048 BIT – Signing & Encryption, Digital Signature Certificates (DSCs). ***For actual requirement of documents and procedure to be followed, the authorized Certifying Authority in India shall be contacted by the applicants. Further details available on http://www.cca.gov.in.***

Proofs and checklist for the certificates with organization name (for Indian Applicants)

- One self-attested recent Photograph of the applicant (only Passport size photo accepted)
- All mandatory columns should be clearly filled
- Mobile number and valid email ID are must
- The Company address should be written in the application form
- Applicant's signature is must in section 3
- If the applicant is a Director or Partner or Proprietor
    - Signature with seal/ stamp in Section 3 is mandatory
    - Self-attestation with seal/ stamp is mandatory in the company proofs
- If the applicant is not a Director or Partner or Proprietor
    - Signature with seal/ stamp from the Director or Partner or Proprietor in Section 4 is mandatory - valid authorisation letter from authorised signatory of the organization
- If the applicant is the Authorised signatory of the organisation
    - Self-attestation of the applicant along with the attestation of the Director or Partner or Proprietor is mandatory in all the company proofs - valid authorisation letter to be attached
- All the proofs including the company proofs should be valid, clear and self-attested
- Signature and address mentioned in the application form should match with the attached proofs

Note: The applicant should contact LRA (Local Registering Authority) nearest to their coordinates to enable LRAs to conduct physical verification for faster delivery of DSCs.

Applicant's identification proofs (any one of the following proofs attested by gazetted officer or bank manager or post master. In case of bank statement, attestation only from the same banker):

Identification proof:

- PAN card
- Passport
- Driving License
- Signature verification letter from banker

Residential Address proof:

- Passport
- Driving License
- Voters ID
- Aadhar card
- Latest bank statement with transaction
- Latest telephone bill
- Vat / sales tax certificate
- Latest Electricity / water bill latest by 3months
- Ration card

SAMPLE

This sample checklist is only for the benefit of prospective bidders/ suppliers to obtain Class-III, SHA2 2048 BIT – Signing & Encryption, Digital Signature Certificates (DSCs). ***For actual requirement of documents and procedure to be followed, the authorized Certifying Authority in India shall be contacted by the applicants. Further details available on http://www.cca.gov.in.***

Organization proofs (any one of the following proofs attested by a company Secretary (who is in employment) or Director or partner or proprietor with organization seal)

Company

- Certificate of incorporation (1st page)
- In case of public limited company certificate of commencement of business
- In case the above certificates contain the address of the company, the same can be taken as address proof also

Partnership firm

- Partnership deed
- If the deed contains the address of the firm, the same can be taken as address proof also

Sole proprietorship firm

- Sales tax or VAT certificate
- Latest IT Return copy
- Service tax certificate

Organization Address Proof (any one of the following proofs attested by a company Secretary (in employment) or Director or partner or proprietor with organization seal. In case of bank statement, attestation must be done only by the same banker)

- Latest telephone bill not exceeding 3 months
- Bank statement attested by banker latest by 3 months

SAMPLE

This sample checklist is only for the benefit of prospective bidders/ suppliers to obtain Class-III, SHA2 2048 BIT – Signing & Encryption, Digital Signature Certificates (DSCs). ***For actual requirement of documents and procedure to be followed, the authorized Certifying Authority in India shall be contacted by the applicants. Further details available on http://www.cca.gov.in.***

Proofs and checklist for the certificates with organization name (for Foreign Applicants)

Identification and address proofs

- One self-attested recent photograph of applicant authorised by the organization (only passport size photograph accepted)
- Identification and address proofs must be attested by the Indian EMBASSY at the country of the applicant
- Self-attestation is mandatory on all the proofs
- Signature and address in the application form should match with those in the proofs

Company Proof

- The document of registration like certificate of incorporation or establishment proof or licence which is applicable in the concerned country must be self-attested by the applicant and counter-attested by the Indian EMBASSY of the country of origin
- If the applicant is a Director
    - All the rules as mentioned in section 3 of the application are to be followed
- If the applicant is the Authorised signatory of the organisation
    - All the rules as mentioned in section 4 of the application are to be followed
    - All the proofs must be self-attested by the applicant
- If the applicant is not Authorised signatory of the organisation
    - Authorisation letter duly signed by authorised signatory along with Identification proof of the Authorized signatory to validate the signature
- If the proofs are in foreign language, they must be translated to English

Note: Company proofs also must be self-attested by the applicant. All signatures by the respective applicants should be followed by official stamp of the organization.

All the documents shall be attested by the Indian Embassy of the country of origin

SAMPLE

TENDER ENQUIRY NO. 235R284 DATE : 08 – JANUARY – 2016
DUE DATE : 05 – FEBRUARY - 2016

SCHEDULE OF COMMERCIAL DEVIATION

The following are the deviations/ variations exception from the General Terms and Conditions:

SL. NO.	CLAUSE NO. OF GENERAL TERMS AND CONDITION	STATEMENT OF DEVIATION

- **In case, this schedule is not submitted, it will be presumed that the equipment/ material to be supplied under this contract is deemed to be in compliance with the General Terms and Conditions**.
- If there is NIL deviation, even then the format to be filled as **NIL DEVIATION**.

Note: Continuation Sheets of like size and format may be used as per the Bidder's Requirement and shall be annexed to this scheduled.

Signature of the authorized representative of

Place: - …….

Bidder's name:……

Date: - …….

Designation……

Company Seal:……

TENDER ENQUIRY NO. 235R284 DATE : 08 – JANUARY – 2016
DUE DATE : 05 – FEBRUARY - 2016

SCHEDULE OF TECHNICAL DEVIATION

The following are the deviations/ variations exception from the Specification:

SECTION	CLAUSE NO. / PAGE NO.	STATEMENT OF DEVIATION/ VARIATIONS/EXCEPTIONS

- **In case, this schedule is not submitted, it will be presumed that the equipment/ material to be supplied under this contract is deemed to be in compliance with the General Terms and Conditions**.
- If there is NIL deviation, even then the format to be filled as **NIL DEVIATION**.

Note: Continuation Sheets of like size and format may be used as per the Bidder's Requirement and shall be annexed to this scheduled.

Signature of the authorized representative of

Place: - …….

Bidder's Name:……

Date: - …….

Designation:……

Company Seal:……

TENDER ENQUIRY NO. 235R284 DATE : 08 – JANUARY – 2016
DUE DATE : 05 – FEBRUARY - 2016

PAGE 01 TO 01

BHEL/TBG/ATS/01

ACTIVITY SCHEDULE

(To be filled – up by the supplier)

NOTE: **This format is to be submitted in original only, duly filled in. Reproduction of this format on bidder's letter head or on other paper is not acceptable.**

SL. NO.	ACTIVITY		ACTIVITY TIME IN WEEKS	CUMULATIVE TIME IN WEEKS FROM LOI/PO DATE	REMARKS IF ANY
1.	Submission of P.O Acceptance	Max 1 week			
2.	Submission of documents necessary for getting manufacturing clearance like Drawings, date sheet etc.				
3.	Review and Approval of documents and issue of manufacturing clearance	**'BY BHEL"**			
4.	Manufacturing Time				
5.	Inspection	**'BY BHEL"**			
6.	Issue of MICC and other documents like Road Permits etc.	**'BY BHEL"**			
7.	Dispatch				

Note : 1) For Sl. No. 4) Inspection call for entire lot to be issued 2 weeks in advance. Date given in call for inspection should be within the period indicated in "A" for completion of activity at Sl. No. 5.

2) Supplier must ensure the completeness and correctness of the requisite documents before submission for approval. Delay in approval on account of incomplete / inadequate information shall be the responsibility of supplier.

3) Inspection call should be given in the prescribed format only. Inspection calls not in the prescribed format shall not be entertained.

4) Qty to be offered for inspection should be in accordance within Delivery-schedule – lot. BHEL reserves the right not to entertain multiple inspection calls for a Delivery – lot and delay on this account shall be the responsibility of Supplier.

5) Bidders to quote their best Delivery Plan in this schedule.

Signature & Seal of

Supplier

Date:

UN - PRICED BID

Enquiry No 235R284 Date : 08 - JANUARY - 2016 Due Date : 05 - FEBRUARY - 2016

(BIDDERS TO STRICTLY ENSURE SUBMITTING THE PRICE BIDS IN THIS FORMAT)

SCHEDULE - A

										QUANTITY FOR SEA WORTHY PACKING			
SL. NO.	DESCRIPTION OF ITEM [AS PER TECHNICAL]	UNIT	QUANTITY	UNIT PRICE EX. WORKS (Rs. / MT) OR (Rs. / Nos.)	TOTAL EX. WORKS (Rs.)	UNIT FREIGHT & INSURANCE FOR 1000 KM DISTANCE (Rs.)	TOTAL FREIGHT & INSURANCE FOR 1000 KM (Rs.)	Excise Duty @.....% OF COL 6 (Rs.)	CST/VAT/ST @.....% OF COL 6 +9 (Rs.) AGAINST FORM "C"	UNIT	QUANTITY [5% OF QUANTITY IN SL. NO. 4]	Unit Rate for Sea Worthy Packing (Rs. / MT) OR (Rs. / Nos.)	Total Rate for Sea Worthy Packing (Rs.)
1	2	3	4	5	6 = 5 * 4	7	8 = 4 * 7	9	10	11	12	13	14 = 13 * 12
1	Galvanized Steel Flat Sizes 75x12 mm, 75x10 mm, 50x6 mm & 25x3 mm (Powergrid)	MT	210							MT	10.5		
2	Mild Steel Flat 50x6 mm (Powergrid)	MT	50							MT	2.5		
	F.O.R. DESTINATION PRICE (Rs.) TOTAL EX - WORKS + ED + CST + TOTAL F & I + TOTAL RATE OF SEA WORTHY PACKING FOR DESIGNATED QUANTITY I. E. 5% OF QUANTITY FOR EACH ITEM.												

*** 5% OF THE TOTAL QUANTITY REQUIRED IS FOR EXPORT JOBS. FOR THIS QUANTITY ONLY SEA - WORTHY PACKING RATES ARE TO BE QUOTED SEPARATELY IN COL. 13. THE EX-WORKS RATE WILL BE ADDED TO SEA WORTHY PACKING RATES AT THE TIME OF PLACEMENT OF INDIVIDUAL PO FOR EXPORT JOBS.**

NOTE:

1. PLEASE NOTE THAT UNPRICED COPY OF PRICE BID (i.e. WITH ALL PRICES BLANKED) SHALL BE FURNISHED ALONG WITH TECHNO-COMMERCIAL BID.
2. REQUIRED COPIES OF FORMAT BE MADE & DETAILS MAY BE ANNEXED.
3. THE PRICES MUST BE QUOTED IN THE PRESCRIBED UNIT ONLY.
4. SALES TAX RATE AS APPLICABLE FOR SPECIFIED DESTINATION SHALL BE QUOTED. IN CASE OF CST, RATE AGAINST "C" FORM SHALL BE QUOTED.
5. IN CASE OF VARIED ED SLAB RATES, CONFIRM YOUR OPTION FOR "X" OR "Y". (STRIKE OFF WHICH IS NOT APPLICABLE) IF NO OPTION IS MENTIONED "X" SHALL BE TAKEN.
6. For any variation in Item description/quantity given in Tech. Spec shall be final.
7. THE VENDORS MUST INDICATE THE APPLICABLE TARIFF NOS. UNDER WHICH ED AND / OR CST WOULD BE PAID BY THEM TO THE TAX AUTHORITIES.
8. IF A VENDOR SUBMITS AN OFFER WITH REDUCED ED AND OR CST APPLICABLE THAN NORMALLY PAID ON SUCH ITEMS, THEY SHOULD SUBMIT NECESSARY DOCUMENTARY PROOF FOR THE SAME.

"X" THE MAXIMUM ED SLAB RATE BE CONSIDERED FOR PRICE COMPARISON. IN THE EVENT OF ORDER ED AT ACTUAL BE PAID.

"Y" THE QUOTED ED RATE BE CONSIDERED FOR PRICE COMPARISON. IN THE EVENT OF ORDER ED AT ACTUAL RATE LIMITED TO QUOTED RATE BE PAID.

SIGNATURE & SEAL OF TENDERER

UN - PRICED BID

Enquiry No 235R284 Date : 08 - JANUARY - 2016 Due Date : 05 - FEBRUARY - 2016

(BIDDERS TO STRICTLY ENSURE SUBMITTING THE PRICE BIDS IN THIS FORMAT)

SCHEDULE - B

										QUANTITY FOR SEA WORTHY PACKING			
SL. NO.	DESCRIPTION OF ITEM [AS PER TECHNICAL]	UNIT	QUANTITY	UNIT PRICE EX. WORKS (Rs. / MT) OR (Rs. / Nos.)	TOTAL EX. WORKS (Rs.)	UNIT FREIGHT & INSURANCE FOR 1000 KM DISTANCE (Rs.)	TOTAL FREIGHT & INSURANCE FOR 1000 KM (Rs.)	Excise Duty @.....% OF COL 6 (Rs.)	CST/VAT/ST @.....% OF COL 6 +9 (Rs.) AGAINST FORM "C"	UNIT	QUANTITY [5% OF QUANTITY IN SL. NO. 4]	Unit Rate for Sea Worthy Packing (Rs. / MT) OR (Rs. / Nos.)	Total Rate for Sea Worthy Packing (Rs.)
1	2	3	4	5	6 = 5 * 4	7	8 = 4 * 7	9	10	11	12	13	14 = 13 * 12
1	Galvanized Iron Flat Sizes 75x12 mm, 75x10 mm, 75x8 mm, 65x10 mm, 65x8 mm, 50x8 mm, 50x6 mm, 25x3 mm.	MT	300							MT	15		
2	Mild Steel Flat Sizes 75x10 mm, 50x6 mm, 75x12 mm & 50x8 mm.	MT	100							MT	5		
3	Earth Electrode (40 mm Dia Galvanized Iron Pipe)	Nos.	200							Liter	10		
	F.O.R. DESTINATION PRICE (Rs.) TOTAL EX - WORKS + ED + CST + TOTAL F & I + TOTAL RATE OF SEA WORTHY PACKING FOR DESIGNATED QUANTITY I. E. 5% OF QUANTITY FOR EACH ITEM.												

*** 5% OF THE TOTAL QUANTITY REQUIRED IS FOR EXPORT JOBS. FOR THIS QUANTITY ONLY SEA - WORTHY PACKING RATES ARE TO BE QUOTED SEPARATELY IN COL. 13. THE EX-WORKS RATE WILL BE ADDED TO SEA WORTHY PACKING RATES AT THE TIME OF PLACEMENT OF INDIVIDUAL PO FOR EXPORT JOBS.**

NOTE:

1. PLEASE NOTE THAT UNPRICED COPY OF PRICE BID (i.e. WITH ALL PRICES BLANKED) SHALL BE FURNISHED ALONG WITH TECHNO-COMMERCIAL BID.
2. REQUIRED COPIES OF FORMAT BE MADE & DETAILS MAY BE ANNEXED.
3. THE PRICES MUST BE QUOTED IN THE PRESCRIBED UNIT ONLY.
4. SALES TAX RATE AS APPLICABLE FOR SPECIFIED DESTINATION SHALL BE QUOTED. IN CASE OF CST, RATE AGAINST "C" FORM SHALL BE QUOTED.
5. IN CASE OF VARIED ED SLAB RATES, CONFIRM YOUR OPTION FOR "X" OR "Y". (STRIKE OFF WHICH IS NOT APPLICABLE) IF NO OPTION IS MENTIONED "X" SHALL BE TAKEN.
6. For any variation in Item description/quantity given in Tech. Spec shall be final.
7. THE VENDORS MUST INDICATE THE APPLICABLE TARIFF NOS. UNDER WHICH ED AND / OR CST WOULD BE PAID BY THEM TO THE TAX AUTHORITIES.
8. IF A VENDOR SUBMITS AN OFFER WITH REDUCED ED AND OR CST APPLICABLE THAN NORMALLY PAID ON SUCH ITEMS, THEY SHOULD SUBMIT NECESSARY DOCUMENTARY PROOF FOR THE SAME.

"X" THE MAXIMUM ED SLAB RATE BE CONSIDERED FOR PRICE COMPARISON. IN THE EVENT OF ORDER ED AT ACTUAL BE PAID.

"Y" THE QUOTED ED RATE BE CONSIDERED FOR PRICE COMPARISON. IN THE EVENT OF ORDER ED AT ACTUAL RATE LIMITED TO QUOTED RATE BE PAID.

SIGNATURE & SEAL OF TENDERER

UN - PRICED BID

Enquiry No 235R284 Date : 08 - JANUARY - 2016 Due Date : 05 - FEBRUARY - 2016

(BIDDERS TO STRICTLY ENSURE SUBMITTING THE PRICE BIDS IN THIS FORMAT)

SCHEDULE - C

SL. NO.	DESCRIPTION OF ITEM [AS PER TECHNICAL]	UNIT	QUANTITY	UNIT PRICE EX. WORKS (Rs. / MT) OR (Rs. / Nos.)	TOTAL EX. WORKS (Rs.)	UNIT FREIGHT & INSURANCE FOR 1000 KM DISTANCE (Rs.)	TOTAL FREIGHT & INSURANCE FOR 1000 KM (Rs.)	Excise Duty @.....% OF COL 6 (Rs.)	CST/VAT/ST @.....% OF COL 6 +9 (Rs.) AGAINST FORM "C"	QUANTITY FOR SEA WORTHY PACKING			
										UNIT	QUANTITY [5% OF QUANTITY IN SL. NO. 4]	Unit Rate for Sea Worthy Packing (Rs. / MT) OR (Rs. / Nos.)	Total Rate for Sea Worthy Packing (Rs.)
1	2	3	4	5	6 = 5 * 4	7	8 = 4 * 7	9	10	11	12	13	14 = 13 * 12
1	Earth Electrode (Cast Iron Pipe) Dia 100 mm, Thickness 10 mm.	Nos.	50							MT	2.5		
2	Earth Electrode (Cast Iron Pipe) Dia 100 mm, Thickness 12/13 mm.	Nos.	50							MT	2.5		
3	Earth Electrode (Cast Iron Pipe) Dia 150 mm, Thickness 10 mm.	Nos.	50							MT	2.5		
4	Earth Electrode (Cast Iron Pipe) Dia 150 mm, Thickness 12/13 mm.	Nos.	50							MT	2.5		
	F.O.R. DESTINATION PRICE (Rs.) TOTAL EX - WORKS + ED + CST + TOTAL F & I + TOTAL RATE OF SEA WORTHY PACKING FOR DESIGNATED QUANTITY I. E. 5% OF QUANTITY FOR EACH ITEM.												

*** 5% OF THE TOTAL QUANTITY REQUIRED IS FOR EXPORT JOBS. FOR THIS QUANTITY ONLY SEA - WORTHY PACKING RATES ARE TO BE QUOTED SEPARATELY IN COL. 13. THE EX-WORKS RATE WILL BE ADDED TO SEA WORTHY PACKING RATES AT THE TIME OF PLACEMENT OF INDIVIDUAL PO FOR EXPORT JOBS.**

NOTE:

1. PLEASE NOTE THAT UNPRICED COPY OF PRICE BID (i.e. WITH ALL PRICES BLANKED) SHALL BE FURNISHED ALONG WITH TECHNO-COMMERCIAL BID.
2. REQUIRED COPIES OF FORMAT BE MADE & DETAILS MAY BE ANNEXED.
3. THE PRICES MUST BE QUOTED IN THE PRESCRIBED UNIT ONLY.
4. SALES TAX RATE AS APPLICABLE FOR SPECIFIED DESTINATION SHALL BE QUOTED. IN CASE OF CST, RATE AGAINST "C" FORM SHALL BE QUOTED.
5. IN CASE OF VARIED ED SLAB RATES, CONFIRM YOUR OPTION FOR "X" OR "Y". (STRIKE OFF WHICH IS NOT APPLICABLE) IF NO OPTION IS MENTIONED "X" SHALL BE TAKEN.
6. For any variation in Item description/quantity given in Tech. Spec shall be final.
7. THE VENDORS MUST INDICATE THE APPLICABLE TARIFF NOS. UNDER WHICH ED AND / OR CST WOULD BE PAID BY THEM TO THE TAX AUTHORITIES.
8. IF A VENDOR SUBMITS AN OFFER WITH REDUCED ED AND OR CST APPLICABLE THAN NORMALLY PAID ON SUCH ITEMS, THEY SHOULD SUBMIT NECESSARY DOCUMENTARY PROOF FOR THE SAME.

"X" THE MAXIMUM ED SLAB RATE BE CONSIDERED FOR PRICE COMPARISON. IN THE EVENT OF ORDER ED AT ACTUAL BE PAID.

"Y" THE QUOTED ED RATE BE CONSIDERED FOR PRICE COMPARISON. IN THE EVENT OF ORDER ED AT ACTUAL RATE LIMITED TO QUOTED RATE BE PAID.

SIGNATURE & SEAL OF TENDERER

BHARAT HEAVY ELECTRICALS LIMITED

TRANSMISSION BUSINESS GROUP
ENGINEERING MANAGEMENT, NEW DELHI

BHEL Document No.	Rev.		Prepared by	Checked by	Approved by
TB-235-509-125	05	Name			
Type of Document: STANDARD SPECIFICATION		Sign	--sd---	--sd--	--sd--
Title: GS FLAT & EARTH ELECTRODE FOR EARTHING SYSTEM		Date	17.08.07	17.08.07	17.08.07
		Group	TBEM		
		W.O. No			
Customer / Consultant					
Tender					

COPYRIGHT AND CONFIDENTIAL
The information contained in this document is the property of *BHARAT HEAVY ELECTRICALS LIMITED*
This must not be used directly or indirectly, in any manner detrimental to the interest of the company

CONTENTS

SECTION	TITLE	PAGE
I.	SCOPE, SPECIFIC TECHNICAL REQUIREMENTS.	1.1 - 1.2
	SKETCH-1 & 2	
II.	STANDARD SPECIFICATION	2.1 -2. 2
III.	PROJECT DETAILS AND GENERAL SPECIFICATION	3.1 - 3.3
IV.	GUARANTEED TECHNICAL PARTICULARS	4.1 - 4.1
V.	CHECK LIST	6.1 - 6.1
VI.	Standard QP	1.0 -4.0

Rev. No.	Date	Altered	Checked	Approved	REVISION DETAILS
05.	18.05.15				MS Flat of size 75x12 mm & 50x8 mm added. Note 4 added in sketch 2.
04	26.11.12				Std QP included.
03	09.11.12	Sd/-	Sd/	Sd/-	POWERGRID requirement & Cut Lengths included.
02	10.06.09	Sd/-	Sd/	Sd/-	Documents updated
01	14.08.07	Sd/	Sd/-	Sd/	Revised as per TBMM requirement.

Distribution	To				
	Copies				

SECTION 1

SCOPE AND SPECIAL TECHNICAL REQUIREMENT

1.0 SCOPE

This technical specification covers the requirements of design, manufacture, testing at works, packing and dispatch of Earthing Strips & Earthing Electrodes, complete with accessories.

This section covers the general technical requirements of Earthing Strips & Earthing Electrodes. In case of any discrepancies between the requirements mentioned in this section and those specified in the following sections of this specification, the specifications given herein shall prevail and shall be treated as binding requirements.

1.1 TECHNICAL REQUIREMENTS:

1.1.1 GALVANIZED MILD STEEL FLAT (Power grid Requirement)

i) Chemical composition & mechanical properties: Grade –A (Item Designation – Fe410W) of IS: 2062.

ii) Mass of protective zinc coating: 618 gm/sq.m and minimum thickness of coating shall be 85 microns for items thicker than 6 mm. For less than 6 mm, the thickness shall be as per clause 4.0 of IS 4759, 1984.

iii) Sizes:

Sl. No.	Description	Approx. Weight (kg)
1	Galvanised Steel Flat 75 x 12 mm	7.0663 kg/meter
2	Galvanised Steel Flat 75 x 10 mm	5.8893 kg/meter
3	Galvanised Steel Flat 50 x 6 mm	2.4008 kg/meter
4	Galvanised Steel Flat 25 x 3 mm	0.5894 kg/meter
5	Mild Steel Flat 50 x 6 mm	2.3316 kg/meter

iv) Length: 4 m to 6 m

v) Raw Material: Vendor to procure the raw material from Power Grid approved Sources with PG stamp.

1.1.2 GALVANIZED MILD STEEL FLAT (Other then Power grid Requirement)

i) Chemical composition & mechanical properties: Grade –A (Item Designation – Fe410W) of IS: 2062.

i) Mass of protective zinc coating: 1) 610 gm/sq.m and minimum thickness of coating shall be 85 microns for items thicker than 6 mm. For

less than 6 mm, the thickness shall be as per clause 4.0 of IS 4759, 1984.

ii) Sizes:

Sl. No.	Description	Weight (kg)
1	Galvanised Iron Flat 75 x 12 mm	7.065 kg/meter
2	Galvanised Iron Flat 75 x 10 mm	5.888 kg/meter
3	Galvanised Iron Flat 75 x 8 mm	4.710 kg/meter
4	Galvanised Iron Flat 65 x 10 mm	5.10 kg/meter
5	Galvanised Iron Flat 65 x 8 mm	4.082 kg/meter
6	Galvanised Iron Flat 50 x 8 mm	3.140 kg/meter
7	Galvanised Iron Flat 50 x 6 mm	2.4 kg/meter
8	Galvanised Iron Flat 25 x 3 mm	0.589 kg/meter
9	Mild Steel Flat 75 x 10 mm	5.7843 kg/meter
10	Mild Steel Flat 50 x 6 mm	2.3316 kg/meter
11	Mild Steel Flat 75 x 12 mm	7.065 kg/meter
12	Mild Steel Flat 50 x 8 mm	3.140 kg/meter

iii) Length: 4 m to 6 m.

1.1.3 EARTH ELECTRODE (Mild Steel iron)

i)	Applicable Standard	IS:1239
ii)	Sizes of Pipe	40 NB
iii)	Grade	Medium
iv)	Thickness of zinc –coating	460 gm/sq.m
v)	Reference Drg.	SKETCH SK-1 (Typical)

1.1.4 EARTH ELECTRODE (Cast Iron)

i)	Cast Iron pipe ID (mm)	100/150 mm
ii)	Thickness (mm)	12/10/13 mm
iii)	Reference Drg.	~~SKETCH~~ SK-2 (Typical)

1.2 Manufacturing quality plan:

i) Quality plan of GS flat is not required for power grid projects. Therefore, the inspection of GS flat & electrodes for power grid projects will be carried out as per relevant Indian Standards (latest version).

ii) The QP enclosed with standard specification is to be followed for Non Power Grid projects.

SKETCH SK-1

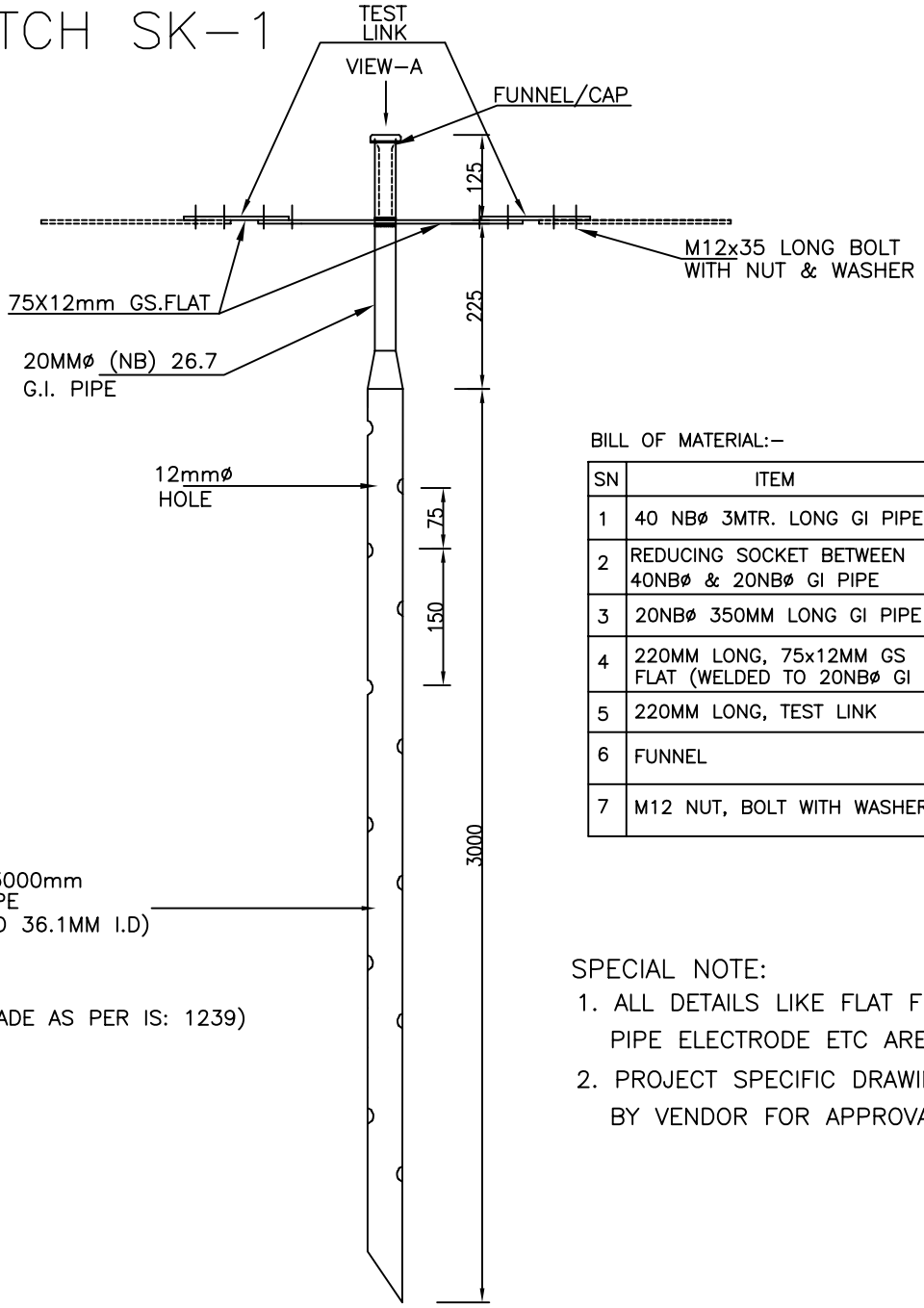

BILL OF MATERIAL:-

SN	ITEM	UNIT	QTY.
1	40 NBø 3MTR. LONG GI PIPE	NOS.	01
2	REDUCING SOCKET BETWEEN 40NBø & 20NBø GI PIPE	NOS.	01
3	20NBø 350MM LONG GI PIPE	NOS.	01
4	220MM LONG, 75x12MM GS FLAT (WELDED TO 20NBø GI PIPE	NOS.	01
5	220MM LONG, TEST LINK	NOS.	02
6	FUNNEL	NOS.	01
7	M12 NUT, BOLT WITH WASHERS	SETS	08

SPECIAL NOTE:

1. ALL DETAILS LIKE FLAT FIXING TO GI PIPE ELECTRODE ETC ARE TYPICAL.
2. PROJECT SPECIFIC DRAWING TO BE SUBMITTED BY VENDOR FOR APPROVAL.

NOTE:

1. ALL DIMENSIONS ARE IN MM.
2. STEEL TO CONFORM TO IS:2062, GRADE-A
3. ALL ITEMS TO BE HOT DIP GALVANISED.
4. SUPPLY OF FIXING BOLTS, NUTS, WASHERS FOR GI FLT EARTHING CONDUCTOR IS ALSO PART OF THE SCOPE
5. WASHER TO BE ELECTRO GALVANISED.

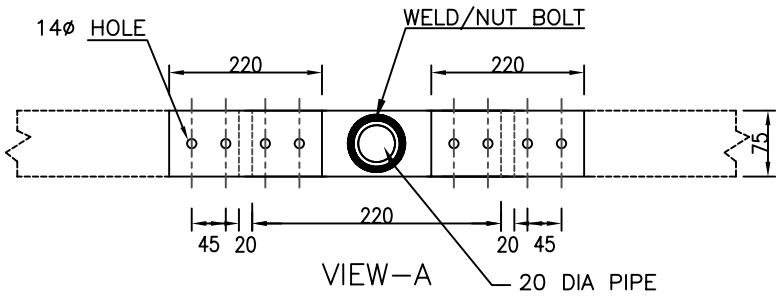

बीएचईएल BHEL	EQUIPMENT EARTHING DETAILS DETAILS OF PIPE ELECTRODE IN TREATED EARTH PIT		
COMPUTERREF.NO.	DRG. No. SKETCH SK-1	REV. 01	SHEET No. –

SKETCH SK-2

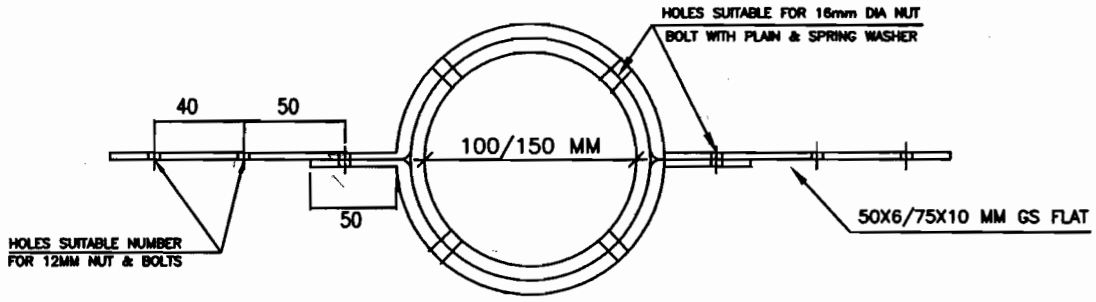

PLAN

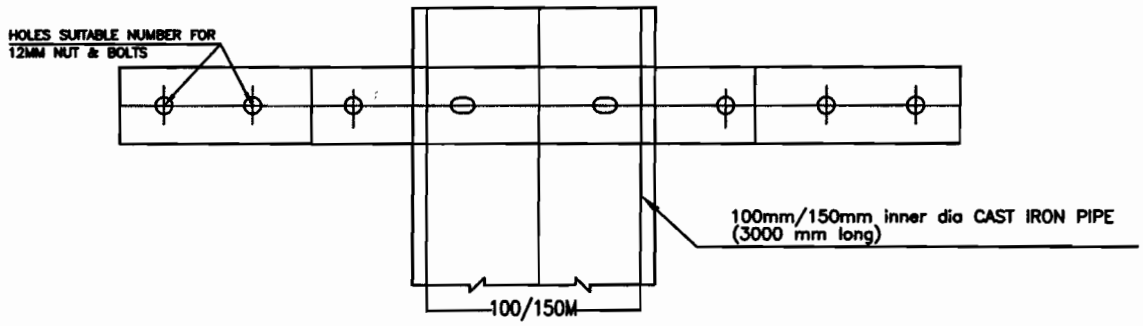

ELEVATION

BILL OF MATERIAL:-

SN	ITEM	UNIT	QTY.
1	100/150MM INNER DIA CI PIPE CONFORMING TO IS :1536-1960	NO.	01
2	16MM NUT, BOLT INCLUDING 1 NO. PLAN WASHERS AND 1 NO. SPRING WASHER	SETS.	06
3	12MM NUT, BOLT INCLUDING 1 NO. PLAN WASHERS AND 1 NO. SPRING WASHER	SETS.	04
4	50X6 OR 75X10 MM GS FLAT (HALF RING)	PAIR	01

SPECIAL NOTE:

1. ALL DETAILS ARE TYPICAL.
2. PROJECT SPECIFIC DRAWING TO BE SUBMITTED BY VENDOR FOR APPROVAL.

NOTE:-

1. ALL DIMENSIONS ARE IN MM
2. ALL NUT AND BOLTS ARE HOT DIP GALVANIZED.
3. WASHERS SHALL BE ELECTRO-GALVANIZED.
4. Cast iron pipe shall be supplied with GS flat suitably wrapped and connected through welding/bolting to minimize contact resistance.

बीएचईएल BHEL			
COMPUTERREF.NO.	DRG. No. SKETCH SK-2	REV. 03	SHEET No.

SECTION - 2

STANDARD SPECIFICATION

2.1 APPLICABLE STANDARDS

The materials shall strictly conform to the following Indian Standards, as appropriate:

The materials shall confirm to the latest editions of the following Indian Standards:

IS 2062: 2011 Steel for general structural purposes

IS 1730: 1998 Dimensions for steel plate, sheets, strips and flats for general engineering Purposes.

IS 1731: 1971 Dimensions for steel flats for structural and general engineering purposes.

IS 2629: 1985 Recommended practices for Hot-dip galvanizing on iron & Steel

IS 2633: 1986 Methods for testing uniformity of coating of zinc- coated articles.

IS 1852: 1985 Rolling & Cutting Tolerance for hot rolled steel products.

IS 1239 (Part 1): 1990 Specification for mild steel tubes, tubular and other wrought steel fittings (Mild Steel tubes)

IS 1239 (Part 2): 1992 Specification for Mild steel tubes, tubular and other wrought steel fittings (Mild Steel Sockets)

IS 4826 – 1979 Hot-dipped zinc coatings on mild steel tubes

IS 4759: 1984 Hot Dip Coatings on Structural Steel and other allied Products

IS 6745: 1972 Determination of mass of Zinc Coating on Zinc Coated Iron and Steel Articles

IS 1536: 1993 Cast Iron Pressure Pipe -Specification

2.2 CONSTRUCTIONAL FEATURES

2.2.1 MILD STEEL FLATS

All steel required for earthing material shall confirm to Grade –A (Item Designation – Fe410W) of IS:2062: 2011.

.

2.2.2 EARTH ELECTRODES

(1) The earth electrodes (Galvanised Iron) shall be perforated and fabricated out mild steel pipes and shall conform strictly to IS 1239 – 2004.

(2) The earth electrodes (Cast Iron) shall be perforated and fabricated out cast iron pipes and shall conform strictly relevant IS: 3043-2006.

Note: Latest revisions shall be followed for all mentioned standard.

SECTION - 3

GENERAL SPECIFICATIONS

3.1 INSPECTION AND TESTING

All tests and inspection of the equipment specified shall be performed to the extent and in the manner as stipulated in the relevant standards and in this specification. All type test/routine tests/acceptance tests as specified shall be conducted as per the details mentioned in the Purchase order for this equipment.

3.2 DOCUMENTATION SCHEDULE AT CONTRACT STAGE: (DOCUMNETATION REQUIRMENT SHALL BE SPECIFIED BY PROJECT PPE AT CONTRACT STAGE AND SHALL VARY FROM PROJECT TO PROJECT).

A (No. of Copies)	For Approval
	Copies of GA drawings with projects details, dimension, equipment weight, fixing details, tolerances and terminal details etc.
	Copies of GTP
	Copies of type test reports
	Copies of manufacturing quality plan.
B (No. of Copies)	**After Approval and For Information/Distribution.**
	Copies of GA drawings
	Copies of GTP
	Copies of type, Routine & Acceptances tests.
	Copies of manufacturing quality plan.
	Copies of shipping list detailing the description & quantities of all items being dispatched separately, with shipping weights, number of cases and dimensions.

3.3 Material shall not be dispatched without the approval of test certificates by purchasers.

3.4 MATERIALS AND WORKMANSHIP

Equipment materials and components shall be new, of high grade and good quality and be to the latest engineering practice. The material and workmanship throughout shall be in accordance with the purpose for which they are intended. Each component shall be designed to be consistent with its duty.

In general, screw threads shall be standard metric threads. The use of other thread from will be used only after prior approval. The supplier shall furnish locking devices for threaded fasteners, which will lock them in such a manner so as to prevent them from coming loose in transport and in service.

All joints and fastening shall be so designed, constructed and registered that the component part may be accurately positioned and restrained to fulfill their required function. The heads of all bolts shall register flush on the surface, which they fasten.
All the information concerning materials or components to be used in manufacturing, machinery, equipment, materials and components supplied, installed or used shall be submitted for approval. Without such approval the supplier shall run risk of subsequent rejection. The cost as well as time delay associated with such rejection shall be borne by the supplier.
Whenever possible, all similar parts of the works shall be made to gauge and shall also be made interchangeable with similar parts. All spare parts shall be interchangeable with, and shall be made of the same materials and workmanship as the corresponding parts of the equipment supplied under the specification. Where feasible, common component units shall be employed in different pieces of equipment in order to minimize spare parts stocking requirements. All equipment of the same type and rating shall be physically and electrically interchangeable.

The supplier shall apply all lubricants used for installation and operation of the equipment. All consumable required for one-year operation shall be in the scope of supplier.

All components exposed to rain shall be designed with sloped upper surface to avoid water pools.

3.5 SURFACE TREATMENT

3.5.1 All metal surfaces shall be treated to provide anti-corrosion protection. All ferrous surfaces for external use shall be hot-dip galvanized after fabrication. High Tensile steel nuts and bolts and spring washers shall be electro-galvanized to service condition .

36 WELDING

All welding shall be done by a qualified welder.

3.7 PACKING AND MARKING

3.7.1 PACKING

GI Flat may be supplied in open condition. However, while stacking the materials for transportation it should be ensured that, similar items are grouped and tied with steel wires /

strips for convenient handling and shall be done in such away to avoid damage during transits.

3.7.2 MARKINGS

The following details shall be marked on the packing:

i) Name and address of the consignee

ii) Purchase Order No:

iii) Name of supplier

iv) Description of material

v) Tare weight

vi) Gross weight

SECTION - 4

GUARANTEED TECHNICAL PARTICULARS for ELECTRODES

1.0 EARTH ELECTRODE (Galvanized iron)

2.1 Mild Steel pipe OD (mm)
2.2 Mild Steel ID (mm)
2.3 Thickness of zinc –coating
2.4 Weight of zinc coating
2.5 Applicable standards

2.0 EARTH ELECTRODE (Cast Iron)

3.1 Cast Iron Pipe OD (mm)
3.2 Cast Iron Pipe ID (mm)
3.3 Applicable standards

CHECK LIST FOR INFORMATION TO BE FURNISHED WITH OFFER

RETURN THIS CHECKLIST AS PART OF THE OFFER DULY SIGNED

The offer may not be considered if the following information and this Checklist are not enclosed with the Offer.

BHEL ENQUIRY. NO:
BIDDER OFFER REFERENCE:

(1)	(2)	(3)	(4)	(5)
S.No.	**Parameter**	**Requirement**	**Yes / No**	**Remarks in case reply in Col (4) is *NO***
1.0	Weight of Zinc coating	Weight of zinc coating shall be as per clause 2.4 of Section-2		
2.0	Tolerance in the flat size	Tolerance in the flat size shall be as per IS:1852-1985		
3.0	Chemical composition of flat/CI Pipe/GI Pipe	Certified copy of the chemical composition of the material as per the relevant standards shall be supplied before the dispatch of the material.		
4.0	Earth electrode	Electrode arrangement shall be provided as per sketch no. SKTECH **SK-1** / SKETCH **SK-2**		
5.0	PG stamp	Raw material shall be inspected at source by Powergrid/BHEL.		
6.0	Length	4 to 6 mtrs		
7.0	Conformance	With enclosed QP		

Date:

Signature of the authorized representative of Bidder

Company Seal

QUALITY PLAN

ITEM : CI PIPE ELECTRODE	QP NO : TBQM-STD-CIE REV: 00 DATE :15-01-11 Page 1 of 2	PROJECT : PACKAGE /CONTRACT : CONTRACTOR : BHEL

S.NO.	COMPONENT / OPERATION	CHARACTERISTIC CHECKED	CATEGORY	TYPE OF CHECK	EXTENT OF CHECK	REFERNCE DOCUMENT	ACCEPTANC-E. NORM	FORMAT OF RECORD	D	AGENCY P	AGENCY W	AGENCY V	REMARKS
1	2	3	4	5	6	7	8	9		10	11	12	13
1.0	INCOMING MATERIALS:												
1.1	MS FLATS	Freedom from defects	Major	Visual	100%	IS 2062	IS 2062	Internal Logbook		M		C	a) MS Flat to be taken from BHEL approved Sources. b) Co-relation of Material Test Certificates to be maintained.
		Dimensions	"	Measure ments	10 %	IS 1852	IS 1852	"		M		C	
		Mech. Properties A. Yield Strength B] Tensile Strength C] % Elongation D] Bend Test	"	Mech	As per IS 2062	IS 2062	IS 2062	Lab Report / Mfr. TC	Y	M		C	
		4) Chem. Composition	"	Chem.	As per IS 2062	IS 2062	IS 2062	Lab Report / Mfr. TC	Y	M		C	
1.2	CI PIPES	Freedom from defects	Major	Visual	100%	IS 1536	IS 1536	Internal Logbook		M		C	a) CI Pipe to be taken from BIS licenses Manufacturer and a copy of valid licenses to be submit along with Test Report. b) Co-relation of Material Test Certificates to be maintained.
		Dimensions	"	Measure ments	10 %	"	"	"		M		C	
		Mech. Properties	"	Mech	As per IS 1536	"	"	Lab Report / Mfr. TC	Y	M		C	
		c) Hydrostatic Test	-do-	Mechani cal	As per IS 1536	IS 1536	IS 1536	"		M		C	
		4) Chem. Composition	"	Chem.	IS 1536	IS 1536	IS 1536	"	Y	M		C	
1.3	Hardware (Nuts, Bolts, Plane Washer &	Mechanical, Chemical and Galvanizing test	-do-	Review	IS 1367 – P -17	IS 1367 – P -17 IS 1367, IS 1363, IS 3063 & IS 2016	IS 1367 – P -17 IS 1367, IS 1363, IS 3063 & IS 2016	Lab Report / Mfr. TC	Y	M		C	Hardware to be taken from BHEL approved Sources.

BHEL SIGN & SEAL	LEGEND : M - MANUFACTURER / SUB CONTRACTOR C - BHEL / NOMINATED INSPECTIO N AGENCY N – CUSTOMER /CUSTOMER NOMINATED AGENCY	P – PERFORMED BY W – WITNESSED BY V - VERIFICATION BY	NAME & SIGN OF APPROVING AUTHORITY & SEAL

Dy. General Manager (TBQM)
Power Sector Business Group
Bharat Heavy Electricals Limited

QUALITY PLAN

ITEM : CI PIPE ELECTRODE	QP NO : TBQM-STD-CIE REV: 00 DATE :15-01-11 Page 2 of 2	PROJECT : PACKAGE /CONTRACT : CONTRACTOR : BHEL

S.NO.	COMPONENT / OPERATION	CHARACTERISTIC CHECKED	CATEGORY	TYPE OF CHECK	EXTENT OF CHECK	REFERNCE DOCUMENT	ACCEPTANC-E NORM	FORMAT OF RECORD	D	AGENCY P	AGENCY W	AGENCY V	REMARKS
1	2	3	4	5	6	7	8	9		10	11	12	13
	Spring Washer)												
2.0	FINAL INSPECTION												
2.1	Calibration of measuring and testing eqpl..	Calibration	Major	Visual	100%	Periodicity of calibration not to exceed 12 months	Periodicity of calibration not to exceed 12 months	Calibratio n records		M		C	Calibration should have been done in reputed laboratory
2.2	CI Pipe Electrode	a) Visual & Dimensions (OD / Thickness) Including Uniformity of Cross Section and	-do-	Visual Measure ment	100% as per IS 3043 / IS 1536 level S4	IS 3043 / IS 1536 Appd. Drgs.	IS 3043 / IS 1536 Appd. Drgs.	Inspectio n report "		M M	C C		Final inspection by BHEL Final inspection is a CHP
		b) Mechanical Test	-do-	Mechani cal	As per IS 1536	IS 1536	IS 1536	"		M	C		
		c) Hydrostatic Test	-do-	Mechani cal	As per IS 1536	IS 1536	IS 1536	"		M		C	
		d) Chemical Composition	-do-	Chemical	One sample	-do-	-do-	"		M	C		
3.0	PACKING	Material , Sturdiness, marking, checking with Packing list	-do-	Visual	100%	BHEL Spec.	BHEL Spec.	Subcontr actor certificate		M			

स्वपन (सिंह) SWAPAN SINGH
उपमहाप्रबन्धक (गु. नि. बु.)
Deputy General Manager (TBQM)
पारेषण व्यापार समूह Transmission Business Group
नई दिल्ली New Delhi

BHEL SIGN & SEAL	LEGEND : M - MANUFACTURER / SUB CONTRACTOR C - BHEL / NOMINATED INSPECTIO N AGENCY N – CUSTOMER /CUSTOMER NOMINATED AGENCY	P – PERFORMED BY W – WITNESSED BY V - VERIFICATION BY	NAME & SIGN OF APPROVING AUTHORITY & SEAL

QUALITY PLAN

ITEM : GI FLAT / GI PIPE ELECTRODE

QP NO : TBQM-STD-GIF
REV: 01
DATE :12-01-11
Page 3 of 4

PROJECT :
PACKAGE /CONTRACT :
CONTRACTOR : BHEL

S.NO.	COMPONENT / OPERATION	CHARACTERISTIC CHECKED	CATEGORY	TYPE OF CHECK	EXTENT OF CHECK	REFERNCE DOCUMENT	ACCEPTANC-E NORM	FORMAT OF RECORD	D	AGENCY P	AGENCY W	AGENCY V	REMARKS
1	2	3	4	5	6	7	8	9		10	11	12	13
				content	sample per shift								
d)	Rinsing	visual	-do-	Visual	100 %			"		M		C	
e)	Prefluxing	Chem.	-do-	Sp. Gr.	One sample for per shift	IS 2629-1985	IS 2629-1985	"		M		C	
f)	Drying	Visual	-do-	Visual	100 %	Value 1.1-1.3	Value 1.1-1.3	"		M		C	
g)	Hot Dip Galvanizing Zinc Temp.	Visual	-do-	Measure ment	Hourly Reading s	IS 2629-1985 450-460 deg C	IS 2629-1985 450-460 deg C	"		M		C	
3.2	Dipping in zinc	"	-do-	Visual	100%					M		C	
a)	Quenching	"	-do-	"	"	IS 2629-1985	IS 2629-1985	"		M		C	
b)	Passivation	Chem.	-do-	"	"	450 to 460 deg C	450 to 460 deg C	"		M		C	
3.3	GALVANISING TESTS:												
	a)	Surface finish no black/bare spots, ash flux, inclusions lumps, pimples and runs etc. (except small & suitable for patching)	-do-	Visual	100%	IS 2629-1985	IS 2629-1985	Internal Logbook		M		C	
	b)	Adhesion Test	-do-	Hammer Test	3 samples per shift	IS 2629-1985	IS 2629-1985	"		M		C	
	c)	Thk of coating	-do-	Physical	"	IS 2629-1985	IS 2629-1985	"		M		C	
	d)	Wt. Of zinc	-do-	Measure ment	"	IS 6745-1972	IS 6745-1972	"		M		C	
	e)	Preece Test	-do-	Chem.	"	IS 2633-1985	IS 2633-1985	IS:4759-		M		C	

BHEL SIGN & SEAL	LEGEND :		NAME & SIGN OF APPROVING AUTHORITY & SEAL
	M - MANUFACTURER / SUB CONTRACTOR C - BHEL / NOMINATED INSPECTIO N AGENCY N – CUSTOMER /CUSTOMER NOMINATED AGENCY	P – PERFORMED BY W – WITNESSED BY V - VERIFICATION BY	

QUALITY PLAN

ITEM : GI FLAT / GI PIPE ELECTRODE	QP NO : TBQM-STD-GIF REV: 01 DATE :12-01-11 Page 4 of 4	PROJECT : PACKAGE /CONTRACT : CONTRACTOR : BHEL

S.NO.	COMPONENT / OPERATION	CHARACTERISTIC CHECKED	CATEGORY	TYPE OF CHECK	EXTENT OF CHECK	REFERNCE DOCUMENT	ACCEPTANC-E. NORM	FORMAT OF RECORD	D	AGENCY P	AGENCY W	AGENCY V	REMARKS
1	2	3	4	5	6	7	8	9		10	11	12	13
								1984					
4.0	FINAL INSPECTION												
4.1	Calibration of measuring and testing eqpt..	Calibration	Major	Visual	100%	Periodicity of calibration not to exceed 12 months	Periodicity of calibration not to exceed 12 months	Calibration records		M		C	Calibration should have been done in reputed laboratory
4.2		a) Visual & Dimensions	-do-	Visual Measurement	100% as per IS 2500-1992 level S4	IS 2629/802-10985-1978 Appd. Drgs.	IS 2629/802-10985-1978 Appd. Drgs.	Inspection report "		M M	C C		Final inspection by BHEL Final inspection is a CHP
		b) Mech. And Chem. Test as indicate in Cl. 1.1 & 1.2	-do-	Mechanical & Chemical	As indicated in cl. 1.1 & 1.2	As listed in 1.1 & 1.2	As listed in 1.1 & 1.2	"		M	C		
		c) Galvanizing. Tests as indicated in 3.3	-do-	Mechanical & Chemical	5S/lot offered	IS 6745-1972 IS 2629-1985	IS 6745-1972 IS 2629-1985	"		M	C		
5.0	Hardware (Nuts, Bolts, Plane Washer & Spring Washer)	Mechanical, Chemical and Galvanizing test	-do-	Review	IS 1367 – P -17	IS 1367 – P -17 IS 1367, IS 1363, IS 3063 & IS 2016	IS 1367 – P -17 IS 1367, IS 1363, IS 3063 & IS 2016	Lab Report / Mfr. TC	Y	M		C	Hardware to be taken from BHEL approved Sources.
6.0	PACKING	Material , Sturdiness, marking, checking with Packing list	-do-	Visual	100%	BHEL Spec.	BHEL Spec.	Subcontractor certificate		M			

BHEL SIGN & SEAL	LEGEND : M - MANUFACTURER / SUB CONTRACTOR C - BHEL / NOMINATED INSPECTIO N AGENCY N – CUSTOMER /CUSTOMER NOMINATED AGENCY	P – PERFORMED BY W – WITNESSED BY V - VERIFICATION BY	NAME & SIGN OF PROVIDING AUTHORITY & DATE

स्वपन सिंह/SWAPAN SINGH
Deputy General Manager (TBQM)
Bharat Heavy Electricals Limited

SEA WORTHY PACKING FOR EXPORT JOBS

1.0 SCOPE:

For export jobs, sea worthy packing capable of performing all necessary functions like prevention of damage to the contents, sufficient to support frequent handling and lengthy periods of outdoor storage in adverse weather conditions are required. Workmanship and material used shall meet the technical requirements and be in accordance with best commercial export packing practices. Vendor shall be responsible for the packing, however, it shall meet the minimum requirements specified herein. Equivalent or better packing methods may be deployed subject to approval of the purchaser. Vendor shall submit the packing procedure for its equipment for purchaser's approval during detailed engineering.

2.0 TECHNICAL SPECIFICATION OF WOOD:

The wood shall be Fir, Chir, Silver Oak (Grevillea Robusta) or chemically treated mango with moisture content not exceeding 50 %. The wood shall have flextural & compressive strength, stiffness, shock absorption and nail retention properties. The wood shall be free from common defects such as warp, bone, twist, knot, cracks, splits, end splits, bend, visible sign of infection and any kind of decay caused by insects, fungus etc. Surface cracks with a maximum depth of 3 mm are permissible. A continuous crack of any depth all along the length is not allowed.

The wood shall be chemically treated to provide protection against deterioration due to fungi and attack by termites, borers, marine organism and any other kind of infection. It shall be treated only after final processing like cutting, planing, joint grooving etc.

3.0 TYPE, DESIGN & DIMENSION OF WOODEN PACKING CASES:

3.1 PACKING OF EQUIPMENTS:

Various mechanical, electrical and C&I equipment e.g. pumps, motors, equipment skids, heat exchangers, control panels, switch gears, transformers etc. shall be wrapped in weather proof packing and then secured in wooden packing cases. The construction of wooden packing cases shall be as per details given below and also in figures 1 to 11.

3.1.1 BOTTOM FRAME:

The construction of bottom frame shall be as per fig. 2. The number of slides/runners for bottom frames shall be selected depending upon the weight and overall dimension of the load to be carried. The equipment shall be secured by fixing their base frame/plate with the help of bolt & nuts etc to the bottom frame of the wooden packing cases. The equipment not provided with the base frame/plate like cylindrical vessels etc. to be secured to the bottom frame of the wooden case with 'C' clamps fabricated from steel channels/angle irons.

3.1.2 TOP FRAME:

The construction of top frame shall be as per fig. 3.

3.1.3 END PANELS:

The dimensions of the end and lateral panels shall be calculated according to overall dimensions of the items to be packed.

Diagonal braces shall be used for packing cases having height exceeding 500 mm. Detail of bracing shall be as per figure 5 to 8.

3.1.4 SLING PLATE:

To facilitate lifting of cases, longitudnal under slide boards shall be fixed. To avoid damage to the box while lifting sling plates shall be provided. Refer fig. 11.

3.1.5 ANGLE IRON CLEATS :

Angle iron cleats shall be used for strengthening the joints as indicated in fig. 10.

3.1.6 OTHER REQUIREMENTS:

The thickness of planks for top, bottom, side and end panels shall be atleast 25 mm. Planks used for this purpose shall be joined with each other by tongue & groove joint. The groove dimension shall be such that tongue fits tightly into groove to make good joint.

Runners/slides, traverse bars etc. shall be of single length i.e. without any joint. Planks for sheathing, diagonal bracing etc shall also be of single length upto 2400 mm. For sizes larger than 2400 mm, proper jointing is permitted for planks for sheathing and diagonal bracing.

Each equipment to be individually covered with double polyethylene petticoat. Sheet thickness of polyethylene sheet shall not be less than 0.175 mm (175 microns). The sealing shall be such so as not to allow moisture inside.

The inner surface of 4 sides of shooks shall be nailed with bituminised water proof kraft paper. Whereever 2 pieces of kraft paper are used, the joint shall have an overlap of minimum 20mm.

All the inner sides of the box shall be nailed with bitumen coated hessian polyethylene kraft paper. For top frame it shall project on all sides by 100mm and shall be nailed on sides. Wherever 2 pieces of kraft paper are used, the joint shall have an overlap of minimum 20mm.

For delicate equipment like control panels, switchgears etc suitable cushioning material like rubberized coir shall be provided on their bottom support. The thickness of coir shall be 50 mm (minimum) and width 100 mm (minimum).

For control panels and switchgears, the gap between the panel and casing shall be filled with rubberized coir with distance between consecutive supports less than 500 mm (reffig 15). For other equipment suitable support from sides of the casing to be provided.

Switchgear cubicles, control panels and control desks shall be packed and shipped in separate convenient sections. The components e.g. circuit breakers relays and instruments etc. which are removed from panels for shipping purpose shall be separately packed and shipped as per packing instructions in clause 3.2.

Packing case for control panels & switchgear panels shall be finally covered with GI sheet of minimum thickness of 0.4 mm.

Packing cases shall be bound at edges by nailing MS clamps/brackets at sufficient intervals. Further, heavier boxes shall be strapped with 'C' clamps (ref fig 4) fabricated from steel channels/angles and lighter boxes shall be strapped with hoop iron strips.

3.1.7 ALTERNATIVE PACKING CASES FOR CONTROL PANELS AND SWITCHGEARS

If required, for control and switchgear panels, construction of wooden packing cases may be provided as per fig 14 & 15 and as detailed below:

Thickness of planks for all sides, binding and jointing battens shall be atleast 25 mm. Width of planks shall be at least 125mm and that of binding and jointing planks shall be at least 100 mm.

Top frame shall be suitable so that it does not collapse due to sandwitching between slings while lifting. Longitudnal and traverse bars for the bottom wooden pallet to be suitably selected.

Diagonal bracings shall be as per clause 3.1.3 and All other requirements shall be as per clauses 3.1.4 to 3.1.6.

3.2 PACKING OF LOOSE ITEMS:

Loose mechanical, electrical and C&I items eg valves, fittings, pressure/temperature gauges/switches, circuit breakers, relays etc shall be individually wrapped using polyethylene sheets/U foam/thermocole sheets/air bubbled sheets depending upon the item and then packed in wooden boxes. The left out spaces and top of the boxes shall be filled with rubberized coir to get proper cushioning effect. Special attention is to be paid to relays, instruments etc for arresting the movement of their operating mechanisms during transportation.

The construction of wooden packing case shall be as per clause 3.1 retaining its all features concerning strength of box. The construction of wooden packing case for loose electrical and C&I items shall be as per fig. 16.

Inner surface of 6 sides of the box shall be lined with Bitumen coated hessian polyethylene kraft paper. Rubberized coir of min. 25 mm thickness and 100 mm width shall be nailed to inner surfaces of bottom and 4 sides of the box.

Loose items such as Galvanised Steel Structure, Cable support racks, Cable Trays and GI Pipes etc. shall be individually wrapped using polyethylene sheets and further lots may be wrapped in Bitumen coated hessian cloth.

4.0 MOISTURE ABSORBER:

Silica gel is used for this purpose to protect contents over sufficiently long time from corrosion. Silica gel shall be of indicating type conforming to IS-304-1979 packed in cotton bags placed at different positions inside the packing for absorbing moisture and shall not come directly into contact with the equipment / material inside the package. The quantity of silica gel shall be enough for storage period of one (1) year, however, it shall not be less than 4 gms per litre volume of case subject to minimum of 400 gms per case.

5.0 INDICATION MARKS ON THE BOXES:

Markings shall be provided on the boxes indicating position of boxes for handling, storage and nature of consignment. For guidelines refer figure 12. The ink used for this purpose as well as for marking despatch instruction shall be indelible/nonwashable marking ink.

6.0 DESPATCH DETAILS:

External front and rear sides of the boxes to be planed for writing instructions.

Dispatch details such as consignor/consignee address, contract and case details, country of origin , port of delivery, stacking instructions shall be written on one of the side of boxes. An anodised aluminium plate shall be provided on one side of the boxes.

One copy of packing slip wrapped in polyethylene bag covered with aluminium packing slip holder to be nailed on the external surface of the box. One more copy of the packing slip wrapped in polyethylene bag to be kept inside the box at the prominent place.

7.0 INSPECTION:

There shall be a Customer Hold Point (CHP) for inspection of final assembly of packing. During above inspection, the records for Chemical Treatment shall be reviewed.

--xx--

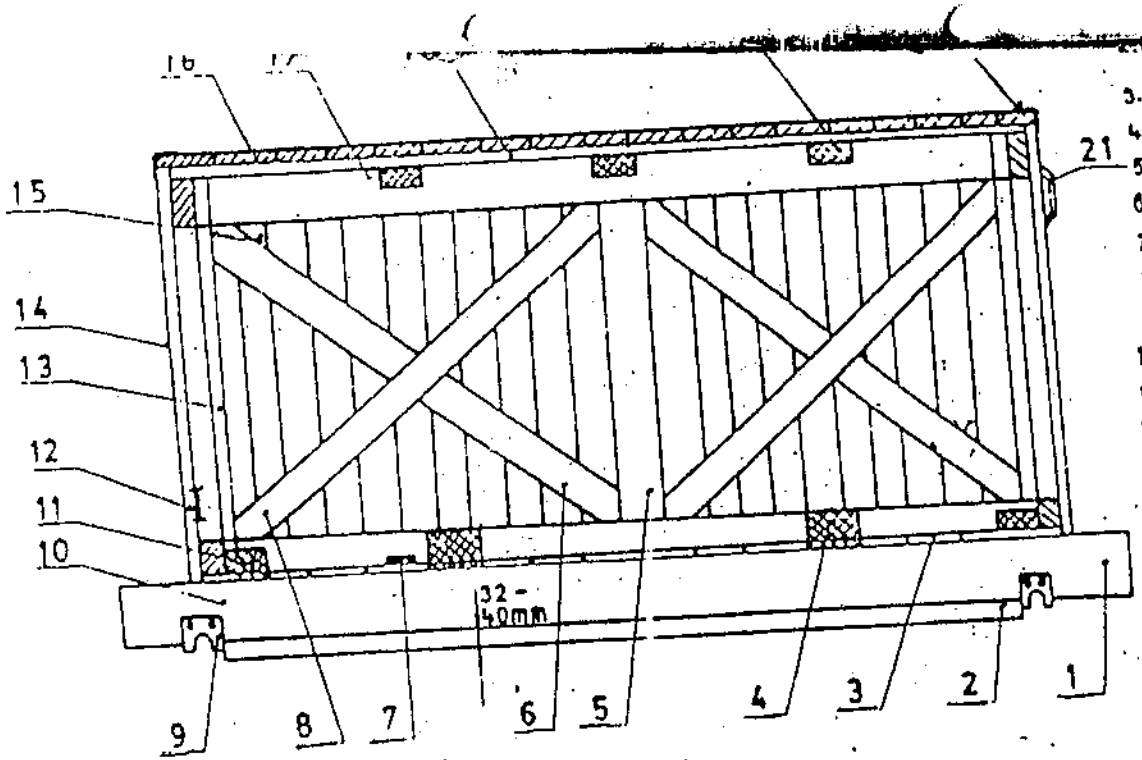

FI .1

2. BOARD
3. BOTTOM BOARD
4. CARRIER TRAVERSE BAR
5. INTERMEDIATE VERTICAL SUPPORT
6. DIAGONAL BRACING
7. DRAINAGE HOLES
8. BATTEN
9. SLING PLATE
10. NUT, BOLT, WASHER
11. END TRAVERSE BAR
12. WATER PROOF LINING OF BITUMANISED PAPER
13. VERTICAL SUPPORTS
14. END SHEATING BOARD
15. SIDE SHEATING BOARD
16. TOP SHEATING BOARD
17. LONGITUDINAL SUPPORT
18. TOP HORIZONTAL BEAM
19. TOP TRAVERSE BARS
20. TOP CORNER STRIPS (FOR STRENGTHENING)
21. OUT SIDE DOCUMENTS CONTAINER.

NOMENCLATURE OF PARTS OF PACKING CASES

FIG. -1

EC 009

4/16

BOTTOM FRAME ARRANGEMENTS

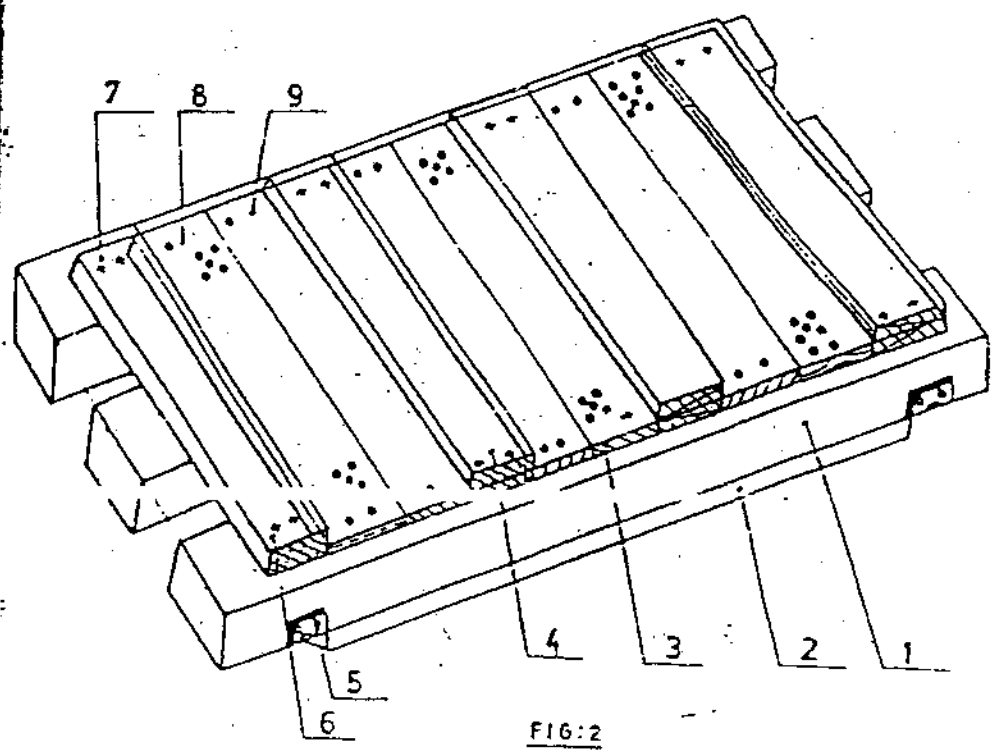

FIG:2

Nos. of slides : Minimum 2 Nos.
For length more than 1800 mm or load more than 1000kg, Nos. of slides shall be minimum 3 Nos.
For dimensions of slides, refer Table 1
Cross section of end traverse bar; 100x100 mm (minimum)

1. SLIDE
2. UNDER SLIDE BOARD
3. BOTTOM BOARD
4. CARRIER TAVERSE BAR
5. SLING PLATE
6. END TRAVERSE BAR
7. BOLT, NUT & WASHER
8. DRAINAGE HOLES
9. NAILS

TOP FRAME ARRANGEMENT

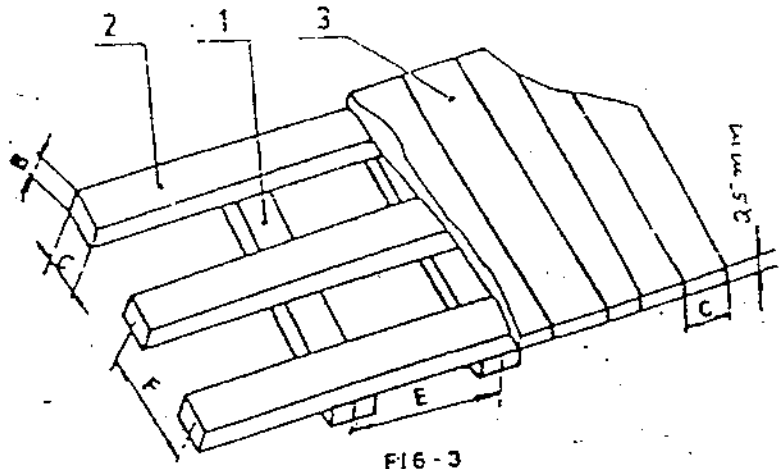

FIG-3

Dim F : 700 to 1000 mm
Dim E : 500 to 900 mm
B x C : 30 x 100 mm.

1 - Treverse Bars
2 - Horizontal Boards
3 - Top Board

ARRANGEMENT OF C-CLAMPS AROUND CASES

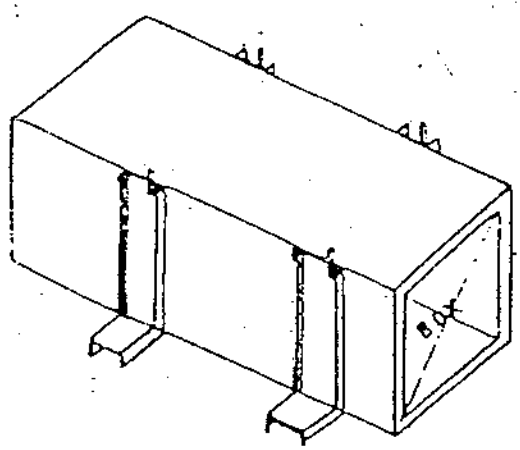

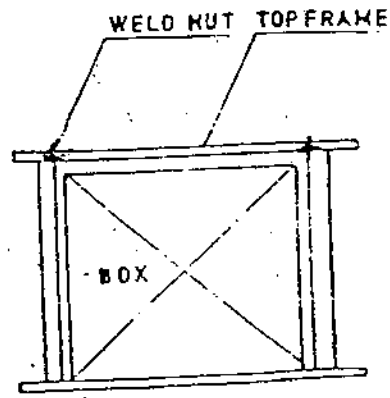

FIG: 4

ARRANGEMENT OF DIAGONAL BRACING AND HORIZONTAL SUPPORT

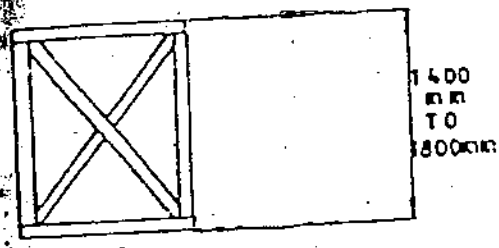

FIG:6

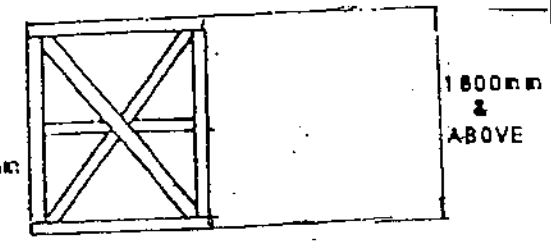

FIG:8

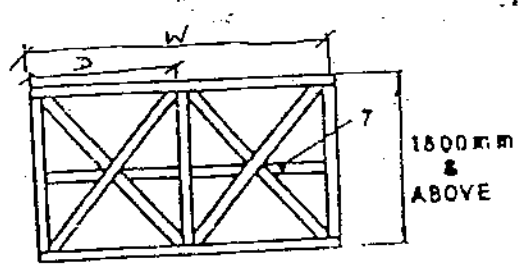

FIG:9

7- Middle Horizontal Support

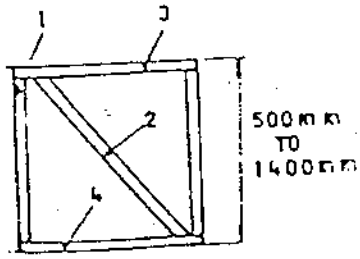

FIG:5

1- Vertical Support
2- Diagonal Bracing
3- Upper Horizontal Support
4- Lower Horizontal Support

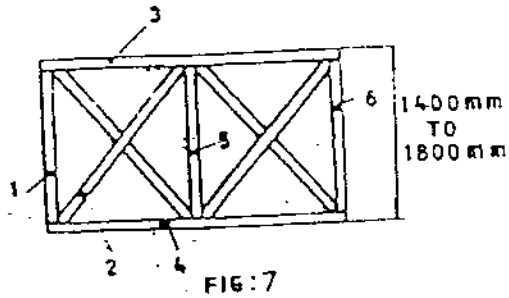

FIG:7

1, 5, 6 - Vertical Support
2 - Diagonal Bracing
3 - Upper Horizontal Support
4 - Lower Horizontal Support

The dimensions of various items shall be as Table-2

ARRANGEMENT OF PACKING CASE

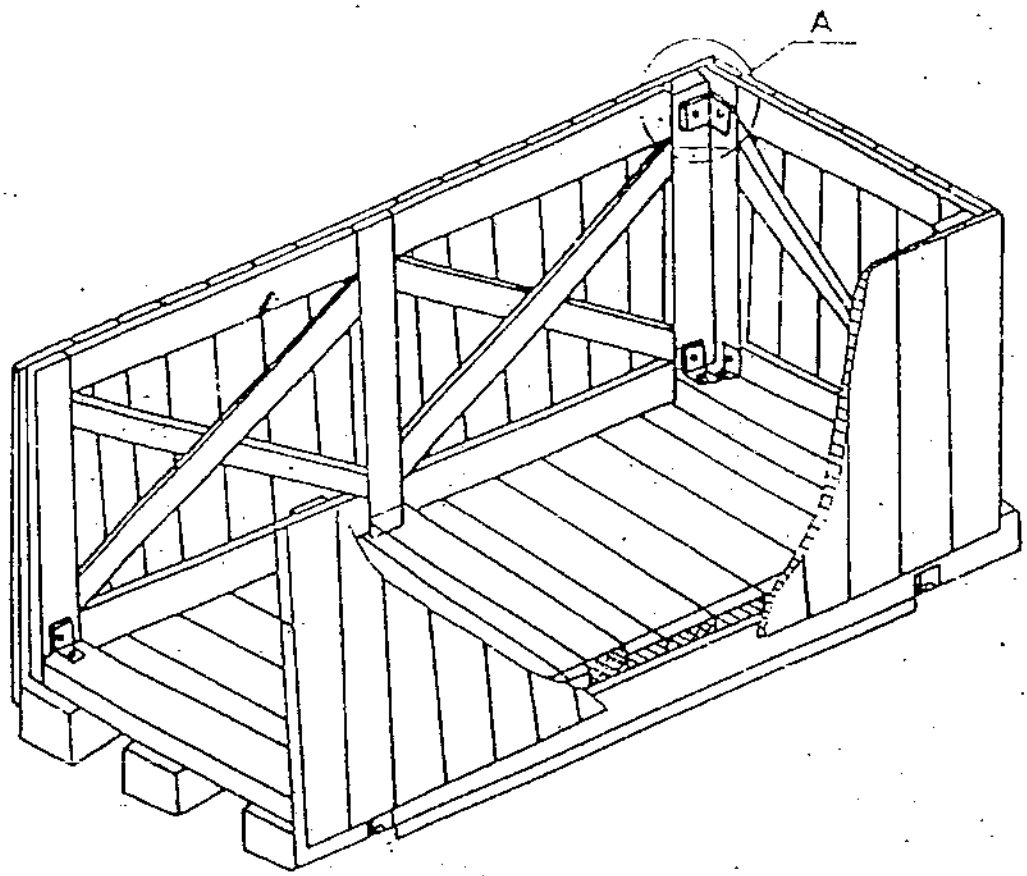

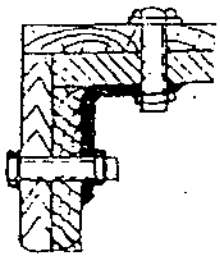

DETAIL-A

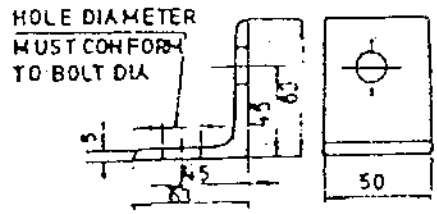

FIG:10

ARRANGEMENT OF SLING - PLATE ON CASES

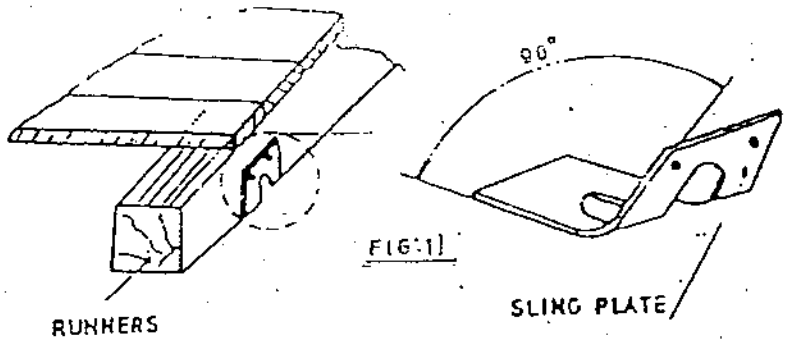

FIG:1

Table 1

Load	Length of Slides 600	800	1000	1200	1300	1500	2000
	Cross Section b x c						
500	50 x 100	50 x 100	50 x 100	50 x 100	75 x 100	75 x 100	100 x 100
800	50 x 100	50 x 100	75 x 100	75 x 100	75 x 100	75 x 100	100 x 100
1000	75 x 100	75 x 100	75 x 100	100 x 100	100 x 100	100 x 110	100 x 150
1500	75 x 100	75 x 100	100 x 100	100 x 100	100 x 100	100 x 150	100 x 150
2000	75 x 100	100 x 100	100 x 100	100 x 150	100 x 150	100 x 150	150 x 150
2500	75 x 100	100 x 100	100 x 150	100 x 150	100 x 150	150 x 150	150 x 150
3000	100 x 100	100 x 150	150 x 150	150 x 150	150 x 150	150 x 150	

Table 2

End and side Panels	Width of the panel W	Distance between longitudinal support DIM 'D'						
		600	800	1000	1200	1400	1600	1800
		Cross Section (b : c)				Item 1 to 7		
Fig 5	600 to 1200	30 x 100	30 x 100	30 x 100	30 x 130	30 x 130	30 x 130	30 x 130
to	1201 to 1600	30 x 130	30 x 130	30 x 130	30 x 130	30 x 130	30 x 130	30 x 130
	1601 to 2000	30 x 130	30 x 130	30 x 130	30 x 130	30 x 130	30 x 130	30 x 130
Fig 9	2001 to 3000	30 x 130	30 x 130	30 x 130	30 x 130	30 x 130	30 x 130	40 x 150
	3001 to 4000	30 x 130	30 x 130	40 x 150	40 x 150	40 x 150	40 x 150	40 x 150

INDICATION MARKS ON CASES

SL NO	INDICATION MARK	MEANING
1		TOP SIDE
2	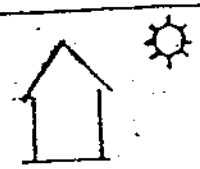	KEEP AWAY FROM HEAT
3		SLINGING POSITION
4		FRAGILE WATERWORLD HANDLE WITH CARE
5		CENTRE OF GRAVITY
6		KEEP DRY

	BHEL-PEM-DELHI-INDIA
CONSIGNEE	
MATERIAL	MO. NO.
CUSTOMER REF.	CASE NO.
DESPATCH ADVICE NOTE NO.	NET WT -KGS / GROSS WT -KGS
DIMENSIONS(MM) LXBXH	
SPECIAL INSTRUCTIONS	HANDLE WITH CARE — KEEP DRY DO NOT DROP — DO NOT TILT

FIG-13: MARKING PLATE.

(31)

13/16

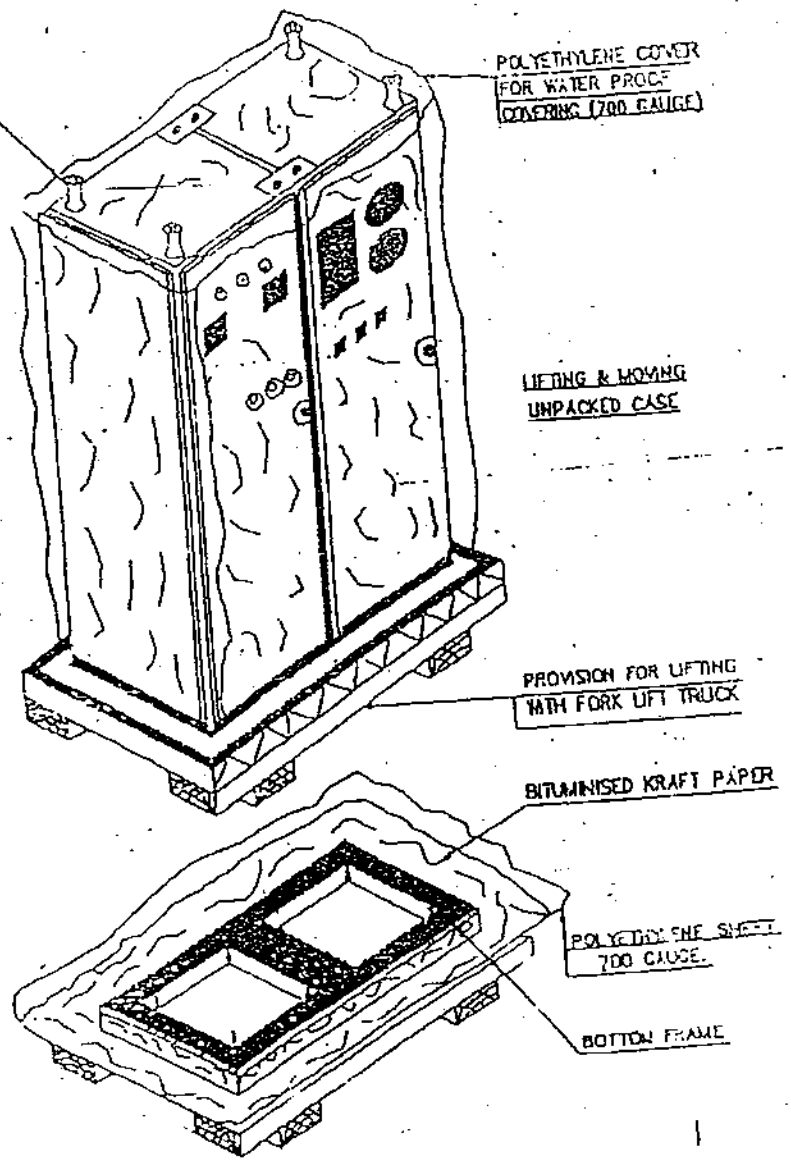
POLYETHYLENE COVER
FOR WATER PROOF
COVERING (200 GAUGE)
EYE BOLT
LIFTING & MOVING
UNPACKED CASE
PROVISION FOR LIFTING
WITH FORK LIFT TRUCK
BITUMINISED KRAFT PAPER
POLYETHYLENE SHEET
200 GAUGE.
BOTTOM FRAME

FIGURE-14

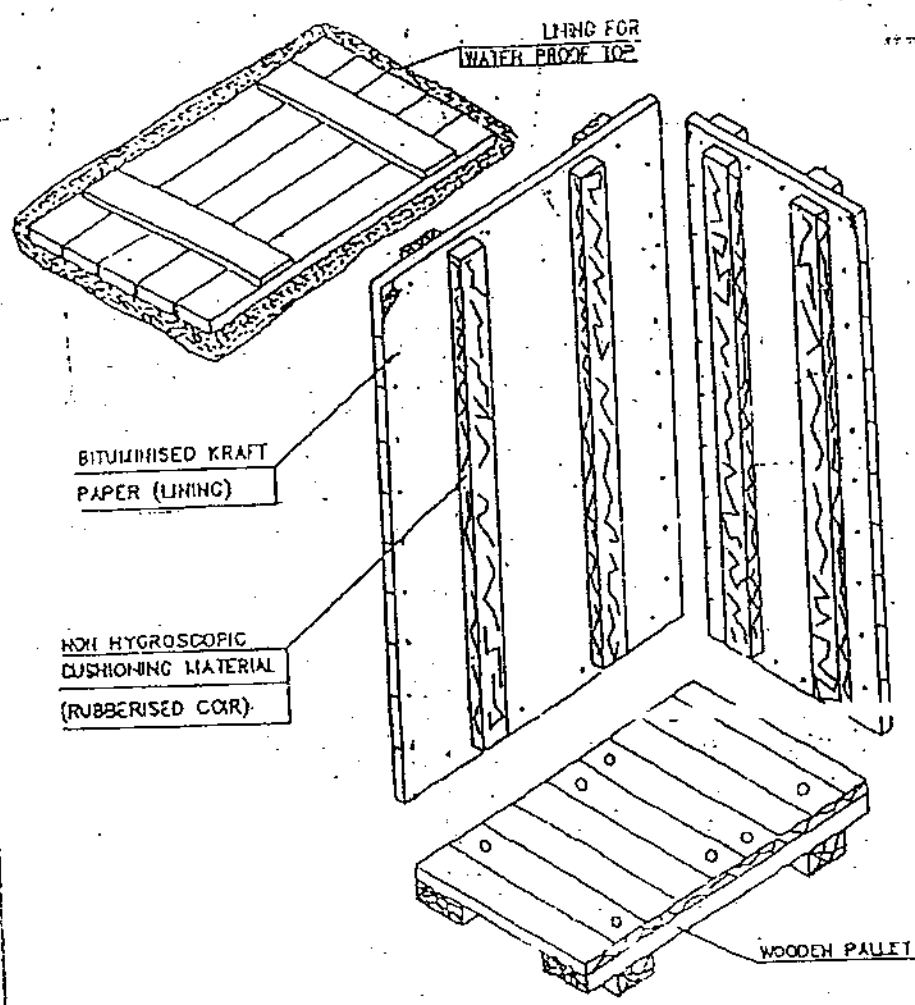
LINING FOR
WATER PROOF TOP
BITUMINISED KRAFT
PAPER (LINING)
NON HYGROSCOPIC
CUSHIONING MATERIAL
(RUBBERISED COIR)
WOODEN PALLET

FIGURE-15

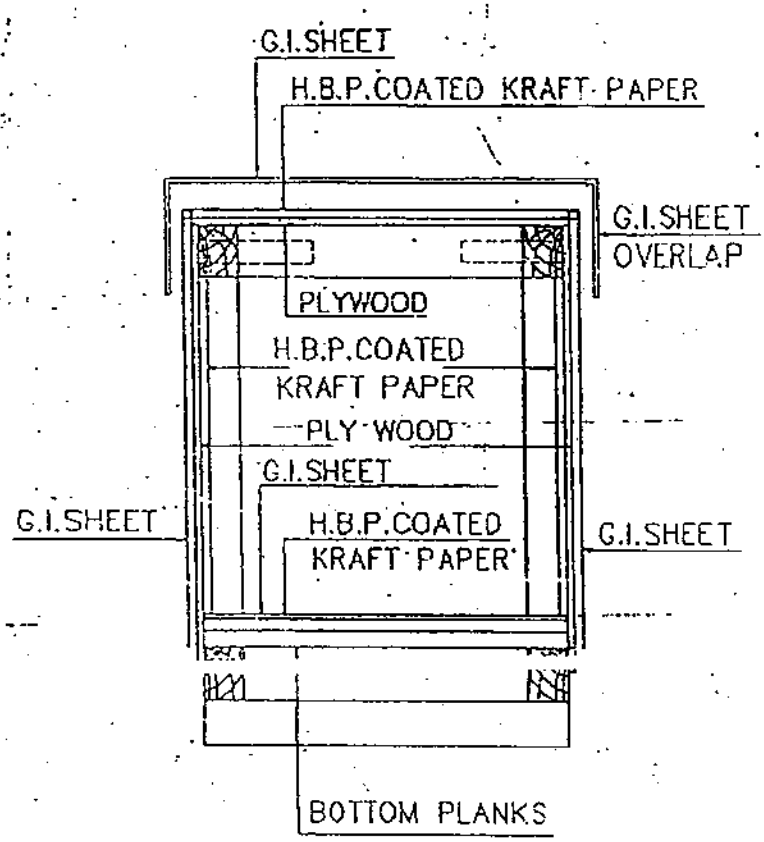

FIG-16 : CLOSED PACKING CASE WITH G.I.SHEET SHOWING LAYERS OF PACKING MATERIALS.