FIRST ANGLE PROJECTION

(ALL DIMENSIONS ARE IN mm)

DRG.NO.

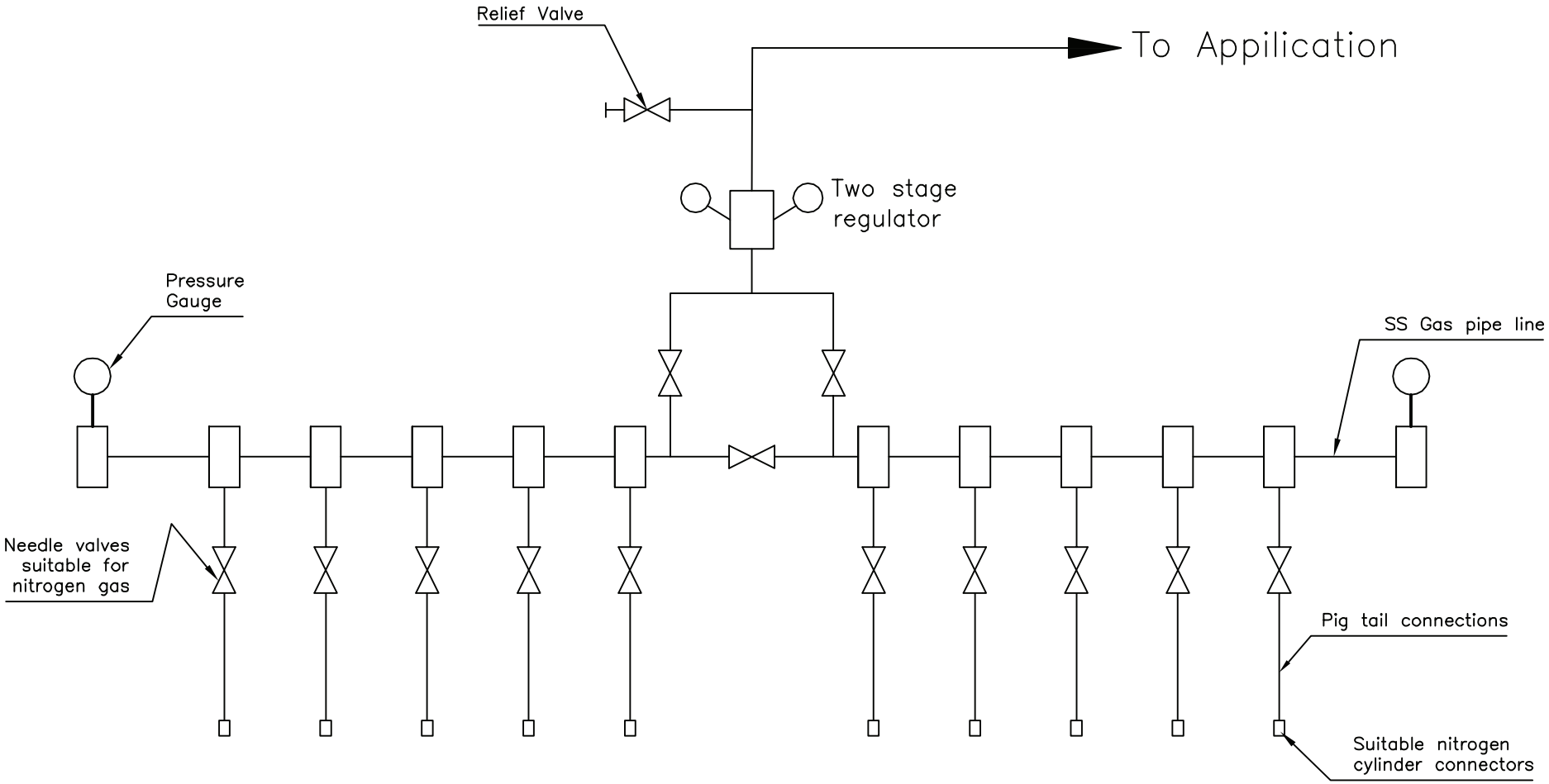

THE INFORMATION ON THIS DOCUMENT IS THE PROPERTY OF BHARAT HEAVY ELECTRICALS LIMITED.
IT MUST NOT BE USED DIRECTLY OR INDIRECTLY IN ANY WAY DETRIMENTAL TO THE INTEREST OF THE COMPANY.

COMP. FILE NAME

REF.DRG.NO.

INVENTORY NO.

REV.	DATE	ALTERED		REV.	DATE	ALTERED		REV.	DATE	ALTERED		REV.	DATE	ALTERED	
		CHECKED	APPD.			CHECKED	APPD.			CHECKED	APPD.			CHECKED	APPD.
ZONE				ZONE				ZONE				ZONE			

TYPE OF PRODUCT OR NAME OF CUSTOMER/PROJECT: 200kW HTSC MOTOR

BHARAT HEAVY ELECTRICALS LIMITED
Corp. R&D Division, Vikasnagar
HYDERABAD - 500 093

	NAME	SIGN.	DATE	NO.OF VAR.
DRN.	T.RAMESH		02.07.15	
CHD.	G.PRAKASH		03.07.15	
APPD.				

DEPT.	EMC	SCALE	WEIGHT(Kg)	REF. TO ASSY DRG.	ITEM NO.	NO.OF ITEMS
CODE	29	NTS				

TITLE: SCHEME FOR NITROGEN GAS MANIFOLD

DRAWING NO. 1YI102090182 REV. 01

SHEET NO. NO OF SHEETS

TD-150/REV.NO.03 SIZE A1