FIRST ANGLE PROJECTION

(ALL DIMENSIONS ARE IN mm)

DRG. NO. 0-00-610-86081 SH.01 OF 01

THE INFORMATION ON THIS DOCUMENT IS THE PROPERTY OF BHARAT HEAVY ELECTRICALS LIMITED. IT MUST NOT BE USED DIRECTLY OR INDIRECTLY IN ANY WAY DETRIMENTAL TO THE INTEREST OF THE COMPANY

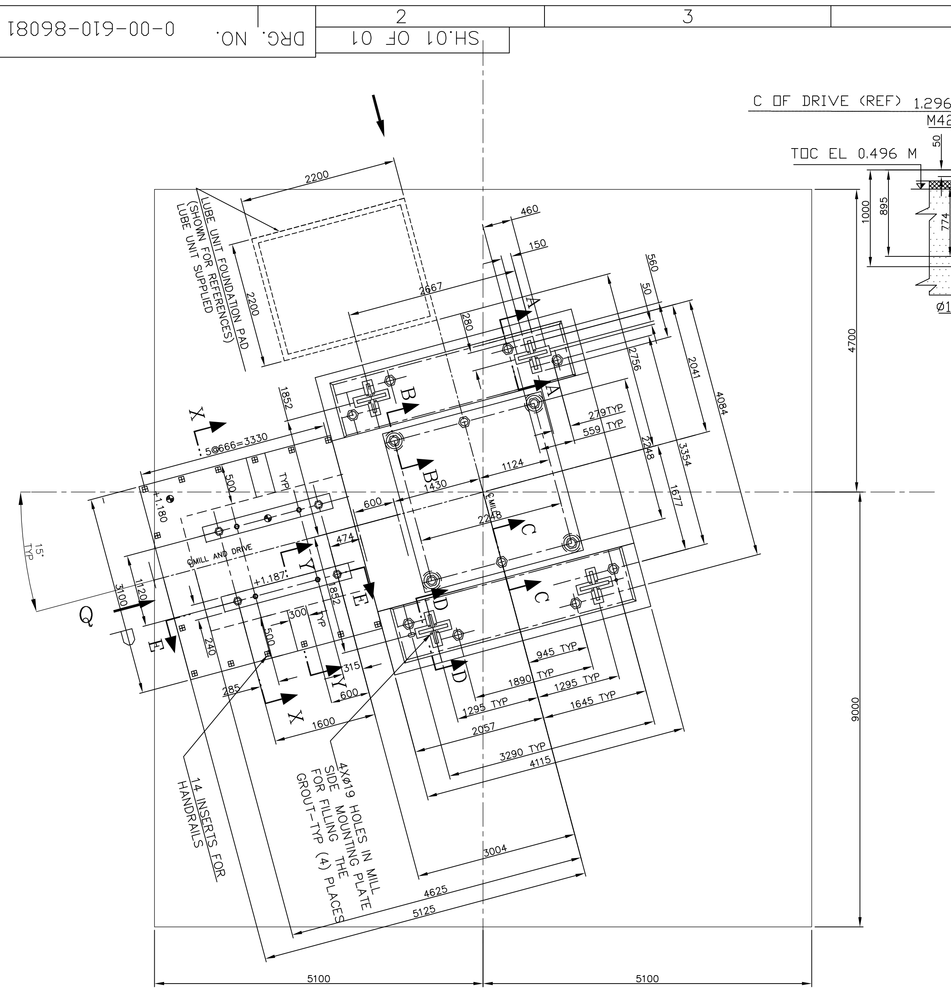

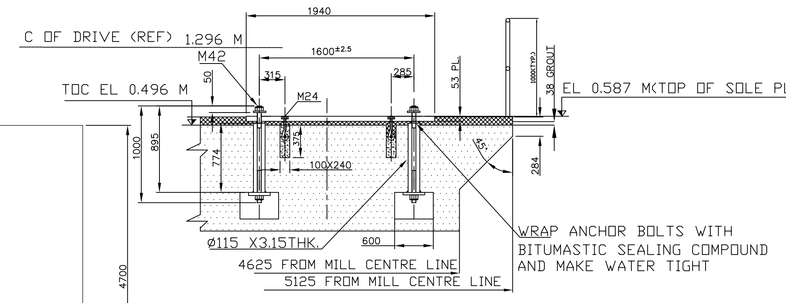

SECTION-E-E

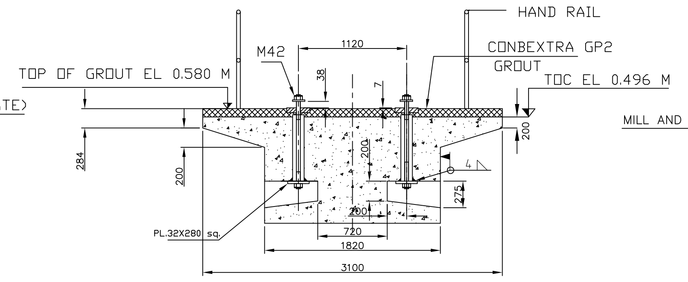

SECTION-X-X

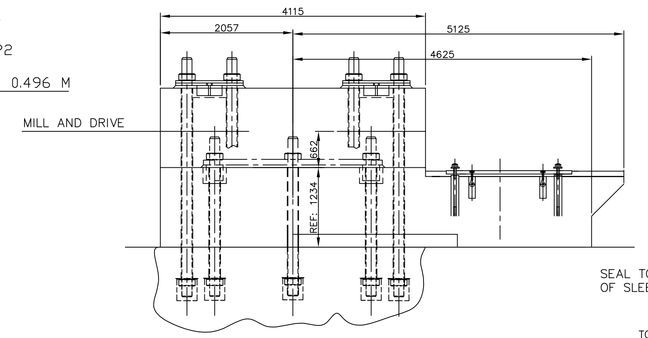

VIEW-Q

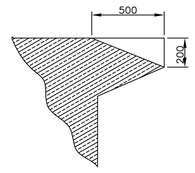

SECTION-Y-Y
(DETAIL FOR CABLE ENTRY)

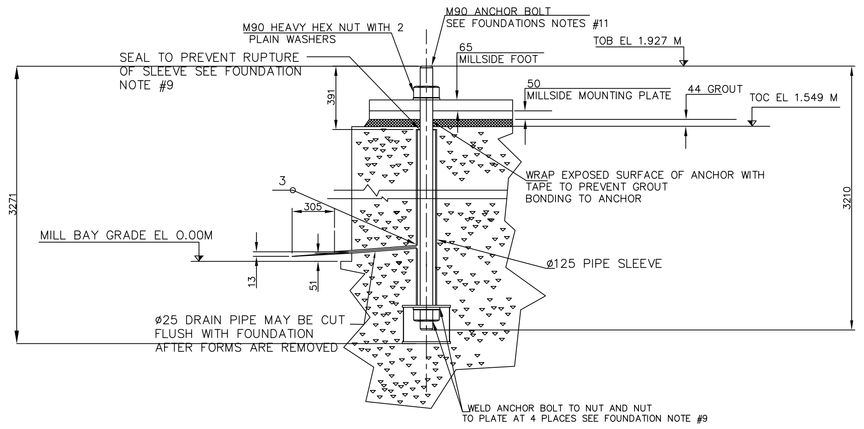

SECTION A-A (8 PLACES)

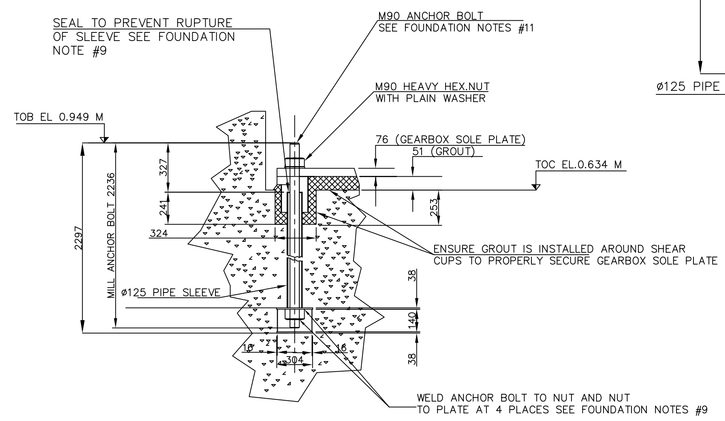

SECTION B-B (4 PLACES)

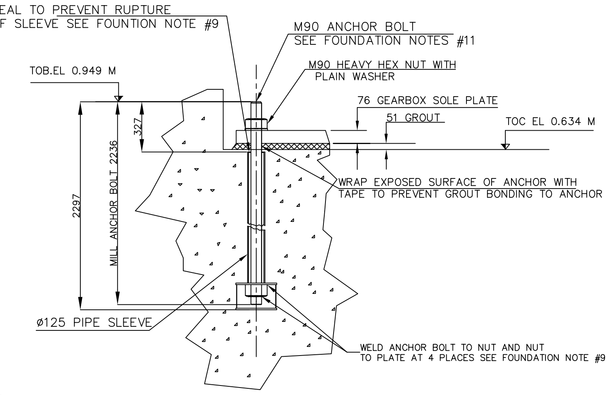

SECTION C-C (2 PLACES)

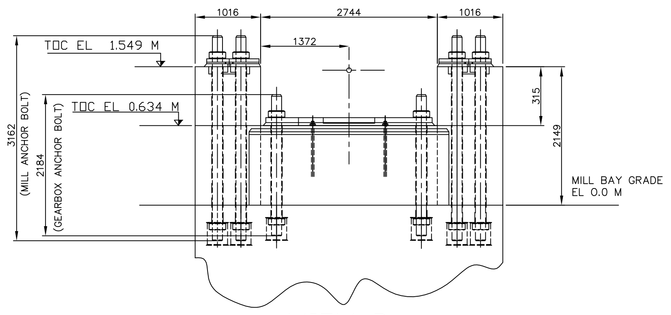

VIEW-P

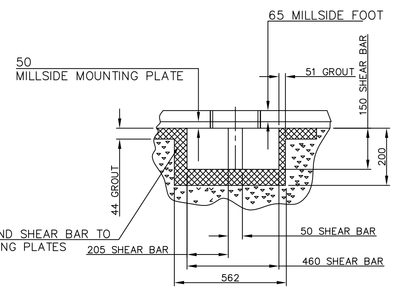

SECTION D-D (4 PLACES)

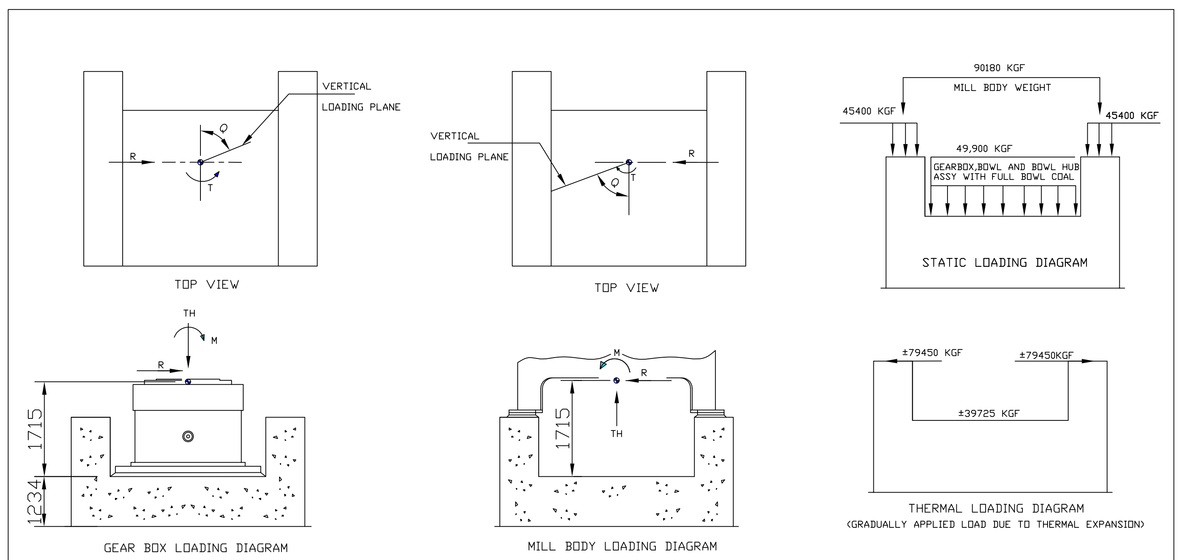

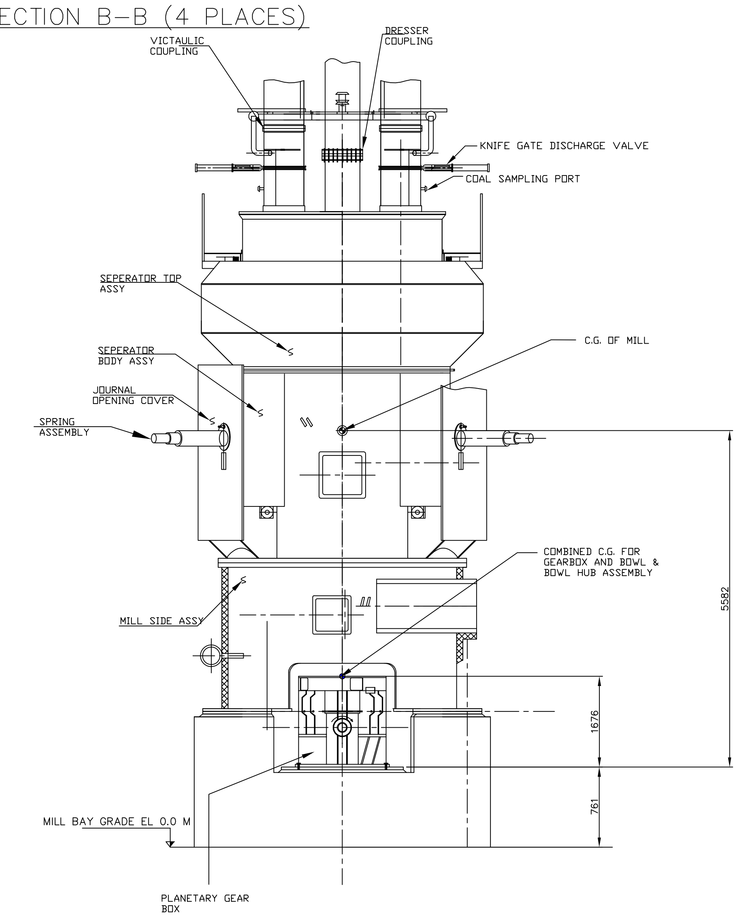

ELEVATION VIEW

MOTOR DATA:-

SUPPLIER : B H E L – BHOPAL
RATING : 696 KW
SPEED : 985 RPM
FULL LOAD AMP STATOR : 168 AMP
VOLTAGE 3 PHASE 50 Hz : 3300 VOLTS
APPROX. WEIGHT OF MOTOR : 7550 Kgs
APPROX. WEIGHT OF ROTOR : 1700 Kgs
GD^2 OF ROTOR : 288 Kgm^2
MAXIMUM FOUNDATION LOAD : 112 kN– UPWARDS
186 kN– DOWNWARDS
DIRECTION OF ROTATION : CLOCKWISE (BI–DIRECTIONAL)

MILL DATA

1. MOTOR SPEED : 985 RPM
2. SPEED OF PULVERIZER : 33 RPM
3. TOTAL WT. OF MILL (EXCLUDING MOTOR) : 140 TONNES.
4. TYPE OF LOAD : MODERATE SHOCK LOAD.

FOUNDATION NOTES:-

1. THIS DRAWING REPRESENTS A SUGGESTED FOUNDATION ARRANGEMENT ONLY. BHEL HYD. IS NOT RESPONSIBLE FOR FOUNDATION DESIGN, PIER TO FOOTING CONNECTION, WORKMANSHOP OR MATERIAL USED. THE FOUNDATION SHOULD BE OF WELL –REINFORCED CONCRETE, DESIGNED IN ACCORDANCE WITH APPLICABLE CODES AND SPECIFICATIONS.
2. LUBE SKID (TANK) LOCATED NEAR THE MILL WILL REST ON GROUT ABOVE 0.04M FROM THE FINISHED FLOOR .
3. SEE HP 1103 BOWL MILL ARRANGEMENT DRAWING 0–00–620–86080 FOR LOCATION AND ORIENTATION OF MILL FOUNDATION AND LUBE OIL SKID W.R.T. BOILER.
4. TOTAL CIVIL FOUNDATION IS NOT IN THE SCOPE OF BHEL HYD.
5. MOTOR MOUNTING PLATE, FOUNDATION BOLTS, SHIMS,PACKERS, SLEEVE ETC. ARE IN BHEL BHOPAL'S (MOTOR SUPPLIER) SCOPE.
6. THE FOUNDATION SHALL BE DYNAMICALLY DESIGNED AS PER IS 2974 GUIDELINES.
7. PULVERISER AND PULVERISER MOTOR FOUNDATIONS MUST BE ONE HOMEGENEOUS BODY.
8. ALL ANCHOR BOLTS ARE TO BE SET IN PIPE SLEEVES AS PER SECTION"A–A","B–B" AND "C–C".SLEEVES MUST BE FREE OF WATER,DIRT,GROUT AND OTHER DEBRIS AND SEALED WATER AND DUST TIGHT AT THE TOP WITH SUITABLE MATERIAL. SEAL MUST ALLOW ANCHOR BOLTS TO ELONGATE WHEN TENSIONED. ANCHOR BOLTS ARE TO BE WELDED AS SHOWN TO PREVENT ROTATION. THE BOTTOM NUT CAN (TOP PLATE, SHELL AND BOTTOM PLATE) IS TO BE DESIGNED TO PREVENT TURNING OF THE CAN & ANCHOR BOLT IN THE FOUNDATION DUE TO THE TORQUE LOAD GENERATED BY THE TENSIONING OF THE ANCHOR BOLT.
9. FOR REQUIRED CLEARANCES AROUND PIERS SEE BOWL MILL ARRANGEMENT DRAWING 0–00–620–86080
10. ANCHOR BOLTS SIZING AND PRELOADING IS BASED ON ANCHOR BOLT MATERIAL OF ASTM A–36
11. ANCHOR BOLTS SHALL BE WITHIN ±3 MM OF THIER DESIGN LOCATION AT THE TOP OF THE BOLT AND VERTICAL WITHIN 1 mm PER 1 METER
12. THE CONCRETE SURFACES TO BE GROUTED ARE TO BE ROUGHENED TO EXPOSE SOUND AGGREGATE. THE SURFACE PROFILE SHOULD HAVE A ROUGHNESS OF 6 TO 13 (PEAK TO VALLEY MEASUREMENT). THIS CAN BE DONE BY USING A NAIL RAKE PRIOR TO THE CONCRETE HAS CURED BY CHIPPING.
13. MILL MOTOR REF BHEL BHOPAL DRGS.
14. ALLOWABLE VERTICAL RIGID BODY FOUNDATION DEFLECTION (SETTLING, START–UP, STEADY–STATE AND SHUT DOWN): 0.13MM PER 3048MM.
15. ALLOWABLE FOUNDATION BENDING AND TWISTING (SETTLING, START–UP,STEADY–STATE AND SHUT DOWN): 0.13MM PER 3048MM.
16. MAXIMUN ALLOWABLE PIER DEFLECTION:
    – UNISON MOVEMENT ±0.38MM @ TOP OF PIER.
    – OPPOSITE MOVEMENT ±0.38MM @ TOP OF PIER.

MAXIMUM DYNAMIC FOUNDATION LOADING (ACTUAL)	
MOMENT (M)	126738 KGM
THRUST (TH)	190680 KGF
RADIAL (R)	38590 KGF
TORQUE (T)	97380 KGM
ANGLE (Q)	0° THRU 360° RANDOM DIRECTION SEE NOTE #2
TORQUE (Tm)	PEAK TORQUE

LEGEND:

● – LOAD CENTER
KGM – KILOGRAM–METER
KGF – KILOGRAM–FORCE

NOTES:

1. ALL DYNAMIC LOADS ARE IN ADDITION TO THE STATIC LOADS
2. THE MOMENT (M) AND RADIAL FORCE (R) COULD OCCUR IN ANY VERTICAL PLANE – I.E THE ANGLE 'Q' RANGES FROM 0° TO 360° PER THE DIAGRAM.

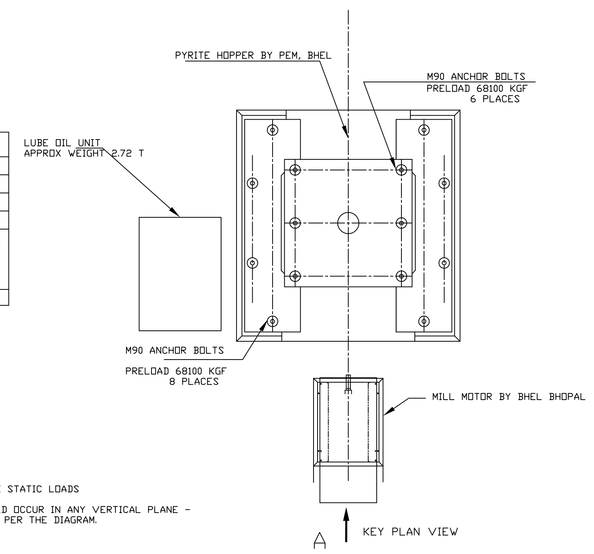

THE FOLLOWING CONDITIONS APPLY EXCEPT OTHERWISE STATED.

1. REF. TO HY0230261 FOR UNSPECIFIED TOLERANCES.
2. CHAMFER M/CD. SHARP EDGES 1.2 TO 1.0 AT 45°
3. INTERNAL M/CD. CORNER RADII 1 TO 0.7
4. THE SURFACE ROUGHNESS WHERE–EVER NOT SHOWN SHALL BE TAKEN FROM THE SURFACE ROUGHNESS SHOWN OUT SIDE THE BACK SLASH GIVEN OR THE TOP MOST RIGHT CORNER OF THE DRG.

CONTRACT DRAWING

OWNER: **TAMILNADU GENERATION AND DISTRIBUTION CORPORATION**

CONSULTANT: **DESEIN PRIVATE LIMITED, NEW DELHI**

PROJECT : **2 X 660 MW ENNORE SEZ SUPERCRITICAL TPP AT ASH DYKE OF NCTPS, CHENNAI - 57.**

BHARAT HEAVY ELECTRICALS LIMITED HYDERABAD

	NAME	SIGN.	DATE	NO.OF VAR.
DRN.	UDAY REDDY		03.01.15	
CHD.	PVS BABU		03.01.15	
APPD.	M V R MURTHY		03.01.15	

DEPT.	UNTOL. DIMS. GR.		SCALE	WEIGHT (KG)	REF. TO ASSY DRG.	ITEM NO.	NO.OF ITEMS
PULV ENGG. CODE 446	C/M/F		NTS				

TITLE: FOUNDATION PLAN OF HP–1103 MILL (WITH PLANETARY GEAR BOX)

CARD CODE

DRAWING NO. 0–00–610–86081 REV. 00

SHEET NO. 01 NO OF SHEETS 01

REV.	DATE	ALTERED	REV.	DATE	ALTERED	REV.	DATE	ALTERED
		CHD./APPD.			CHD./APPD.			CHD./APPD
ZONE			ZONE			ZONE		

COMPUTER FILE NAME | SIGN. AND DATE | REF. DRG. NO. | INVENTORY NO