	CFFP/BHEL HARDWAR		**FF07005 R01**
			04-09-2014

SPECIFICATION FOR VERTICAL BORING MACHINE

NOTE:-

1	**The "VENDOR TO CONFIRM/SPECIFY" Column of this format shall be filled in by the Vendor and submitted along with the offer. Inadequate / incomplete, ambiguous, or unsustainable information against any of the clauses of the specifications/requirements shall be treated as non-compliance.**	
2	**The offer and all documents enclosed with offer should be in English language only.**	
3	**Any deviation may be clearly mentioned**	
4	**Vendor should furnish required information/confirmation against each and every clause of this technical specification. This complete specification is a CHECKLIST for evaluation purpose. Therefore, leaving any clause as blank or without complete information will lead to Non compliance**	
5	**Meeting the Qualification requirment as per Clause 21 is very important for the vendor. This should be strictly adhered.**	
6	**Only METRIC System to be followed for all parts of the machine & its peripherals/accessories**	

SCOPE: SUPPLY, ERECTION & COMMISSIONING OF VERTICAL BORING MACHINE COMPLYING WITH SPECIFICATIONS AS BELOW

SNO	CFFP/BHEL,HARDWAR REQUIREMENT	VENDOR TO CONFIRM/ SPECIFY	VENDOR'S OFFER WITH TECHNICAL DETAILS AND REMARKS
1.0	**PURPOSE & WORKPIECE MATERIAL**		
1.1	**Purpose**		
1.1.1	Turning	To confirm	
1.1.2	Boring	To confirm	
1.1.3	Facing	To confirm	
1.1.4	Taper turning	To confirm	
1.1.5	Profile machining	To confirm	
1.2	**Work Piece Material**		
1.2.1	The Machine is required for machining of Steel Castings and Forgings (in black condition). Machine should be suitably designed to withstand toughest conditions as our castings & forgings generally have black spots, hard spots, sand inclusion, bend, cracks, etc. Machine shall be utilized for bulk material removal. Intermittent cutting shall also be there.	To confirm	
1.2.2	**Work Piece Material:** The components to be machined will be mainly high temperature & creep resistant alloy steel castings and forgings of Mat. grade 17CrMoV511, X22CrMoV121 having tensile strength 40-95 Kg/mm2, %Elongation 15-22% & Hardness up to 350BHN.	To confirm	
2.0	**SPECIFICATION:**		
2.1	**CAPACITY & SIZE**		
2.1.1	Max. Job height for turning & facing - 3600 mm or above	To confirm	
2.1.2	Table Diameter - 4500 mm or more	To confirm	
2.1.3	Turning Diameter- 5000 mm or more	To confirm	
2.1.4	Max. Weight of Job - 100 MT or more	To confirm	

SNO	CFFP/BHEL,HARDWAR REQUIREMENT	VENDOR TO CONFIRM/ SPECIFY	VENDOR'S OFFER WITH TECHNICAL DETAILS AND REMARKS
2.2	**TABLE**		
2.2.1	Table Speed 0.2 - 30 rpm	To confirm	
2.2.2	No. of speed ranges	To specify	
2.2.3	Power of Main Drive (S1-Continuous Rating) AC Motor 100KW or more.	To confirm	
2.2.4	Details of Main Drive	To specify	
2.2.5	No. of Jaws - 04	To confirm	
2.2.6	Additional No. of Jaws as spares - 04	To confirm	
2.2.7	Maximum External Clamping Diameter	To specify	
2.2.8	Minimum External Clamping Diameter	To specify	
2.2.9	Maximum Internal Clamping Diameter	To specify	
2.2.10	Minimum Internal Clamping Diameter	To specify	
2.2.11	Clamping Force of each Jaw.	To specify	
2.2.12	Positions and Dimensions of the Jaws on Table. Chucking Capacity Diagram should be submitted.	To specify	
2.2.13	Type of Force Multiplier Mechanism used in Jaws should be explained and Drawings should be submitted.	To specify	
2.2.14	Cutting Force	To specify	
2.2.15	Torque	To specify	
2.2.16	RPM at which Max. Torque is available.	To specify	
2.2.17	Table Torque - Speed diagram should be submitted.	To specify	
2.2.18	Type of Bearing for the Table : Hydrostatic (should be confirmed by Vendor) . Complete details like bearing size, sizes of pockets, oil pressure, lubrication etc. should be furnished.	To confirm & submit details	
2.2.19	Size of T - slots, their position and accuracy. Drawing of Table showing details of the T - slots etc. should be submitted.	To specify	
2.2.20	Two perpendicular accurate Slots should be provided at the Center of the table to use for alignment purposes. Sizes (Width & Depth), accuracy etc. of these slots should be furnished along with a Drawing.	To specify	
2.2.21	Table Loading Diagram should be submitted (Load v / s Distance from Table Center) for uniform as well as for eccentric loading.	To specify	
2.2.22	Diameter, Depth and Accuracy of Center Bore on Table Top Surface.	To specify	
2.3	**CROSS RAIL**		
2.3.1	Vertical Travel.	To specify	
2.3.2	Vertical Traverse Rate.	To specify	
2.3.3	No. of Positions.	To specify	
2.3.4	Distance between each Position - 250 mm or less	To Confirm & Specify	
2.3.5	Distance of lowest Step from Table Top	To specify	
2.3.6	Distance of highest Step from Table Top	To specify	
2.3.7	Maximum Height of Cross Rail bottom from Table Top	To specify	
2.3.8	Minimum Height of Cross Rail bottom from Table Top	To specify	
2.3.9	Movement of Cross Rail & clamping system	Vendor to furnish detail	
2.3.10	Machine Reference Point should be at Ram Reference Point and it should be updated automatically with movement of Cross Rail	To confirm	
2.3.11	Details of crossrail movement/positioning/locking drive system	To specify	

SNO	CFFP/BHEL,HARDWAR REQUIREMENT	VENDOR TO CONFIRM/ SPECIFY	VENDOR'S OFFER WITH TECHNICAL DETAILS AND REMARKS
2.4	**CROSS RAIL TOOL HEAD and RAM**		
2.4.1	No. of Column - 02	To confirm	
2.4.2	No. of Rams - 02	To confirm	
2.4.3	Vertical Milling Head - 01	To confirm & submit details	
2.4.4	Minimum dia of bore using ram - 600mm or less	To confirm & Specify	
2.4.5	Cross - Section of Ram (it should be rigid enough for trouble free machining with maximum projection of ram)	To confirm & specify	
2.4.6	Mechanism for Taper machining in both the Heads - Through Head tilting/ Gear train/ PLC/NC. Vendor to explain the mechanism including the angle range with least count.	To confirm & furnish details	
2.4.7	Mechanism for Contour/Profile machining. Vendor to furnish detail.	To confirm & furnish details	
2.4.8	Clamping details for mounting Turning Tool Holders/Attachments on ram	To specify	
2.4.9	Clamping Force Available for clamping of Turning Tool Holders/Attachments.	To specify	
2.4.10	Mechanism for Mounting of Turning Tool Holders	To specify	
2.4.11	Max.Cutting Force R.H.Head	To specify	
2.4.12	Max.Cutting Force L.H.Head	To specify	
2.5	**MAIN TRAVERSES**		
2.5.1	Vertical Travel of Ram (Z-Axis) - 2200 mm (If offered Turning Height is more, Ram travel should also be increased by half value of increase in Turning Height)	To confirm	
2.5.2	Horizontal Travel of Ram (+ ve X - Axis)	To specify	
2.5.3	Horizontal Travel of Ram beyond Center of the Table (-ve X - Axis)	To specify	
2.5.4	Maximum Distance between Table Top and Standard Turning Tool Holder with Tool.	To specify	
2.5.5	Minimum Distance between Table Top and Standard Turning Tool Holder with Tool.	To specify	
2.5.6	Maximum Distance between Table Top and Vertical Milling Head with Cutter.	To specify	
2.5.7	Minimum Distance between Table Top and Vertical Milling Head with Cutter.	To specify	
2.6	**MACHINE GUIDEWAYS:**		
2.6.1	Width of Cross Rail guideways	To specify	
2.6.2	Width of column guideways	To specify	
2.6.3	Hardness of guideways	To specify	
2.6.4	Telescopic Covers of rust resistant material with Wipers should be provided for all axes guide ways. Thickness must be 3mm minimum	To confirm & furnish details	
2.6.5	X & Z guideways should be hydrostatic (details to be submitted)	To confirm & specify	
2.6.6	Table Rotary guideways should be hydrostatic (details alongwith min. & max. dia. of Hydrostatic bearing should be furnished)	To confirm & specify	

SNO	CFFP/BHEL,HARDWAR REQUIREMENT	VENDOR TO CONFIRM/ SPECIFY	VENDOR'S OFFER WITH TECHNICAL DETAILS AND REMARKS
2.7	**FEEDS AND DRIVE SYSTEM:**		
2.7.1	Cutting feed in X-Axis (Continuous Variation) 0.04-350 mm/min	To confirm	
2.7.2	Cutting feed in Z-Axis (Continuous Variation) 0.04-350 mm/min	To confirm	
2.7.3	Rapid feed in X - Axis	To specify	
2.7.4	Rapid feed in Z - Axis	To specify	
2.7.5	X - Axis Feed Drives / Motors [AC servo motors] of Siemens/Fanuc make (detail like model, type, rating etc. should be submitted). Ball/Lead screw details also to be submitted	Vendor to specify & submit detail	
2.7.6	Z - Axis Feed Drives / Motors [AC servo motors] of Siemens/Fanuc make (detail like model, type, rating etc. should be submitted). Ball/Lead screw details also to be submitted	Vendor to specify & submit detail	
2.7.7	Maximum cutting force permissible on Ram and at what extension	To specify	
2.7.8	Maximum permissible Cutting Force at Maximum Ram extension	To specify	
2.7.9	Permissible Cutting Force v / s Ram Projection - Diagram should be submitted.	Vendor to specify & submit detail	
2.7.10	Details of backlash free movement mechanism in X & Z axes should be submitted.	Vendor to specify & submit detail	
2.7.11	Mechanism for locking X & Z axis. Details to be submitted	Vendor to specify & submit detail	
2.8	**CONSTRUCTION:**		
2.8.1	Vendor to furnish details of material, hardness & constructional details, including explanatory drawings, of various components/assemblies like Column, Cross Rail, Ram head, Table, Guideways/slides, Feed Transmission system, Ram, Hydraulic and Lubrication system etc of the machine.	Vendor to submit detail	
2.8.2	Video images on CD including hard copy explaining the technical features / Literature with photographs, drawings explaining the technical features should be enclosed with the offer	Vendor to submit	
2.9	**OPERATOR'S PLATFORM:**		
2.9.1	It moves in upward / downward direction with the Cross rail and in horizontal direction with saddle.It should be able to reach almost to center of the Table in horizontal direction. Interlocks should be provided for its horizontal / downward movement against rotating Table and against the job (rotating or stationary) to avoid collision / accident. Drawing / Details of the Operator's Platform should be submitted. A 15 Amp. Plug Point with ON/ OFF switch is also to be provided on the Platform	To confirm	
2.9.2	Height of Platform Railing.	To specify	
2.9.3	Weight Capacity of the Platform.	To specify	
2.9.4	Minimum Position of Platform from Shop Floor.	To specify	
2.9.5	Movable Chip / Splash Guard should be provided all around the Table with sufficient height to avoid scattering of Chips on Operator's Platform and Shop Floor.	To confirm	
2.10	**OPERATION AND CONTROL SYSTEM:**		
2.10.1	**OPERATOR'S PANEL:**		
2.10.1.1	Swivellable type Operator's pendant panel having complete machine control system shall be provided. All switches/push buttons/keys with suitable interlocks should be provided on the panel. All displays/indications should also be conveniently placed accordingly.	Vendor to confirm & submit Detailed Layout.	
2.10.1.2	Hand held unit (auxiliary pendant) type B-MPI of Siemens make or equivalent with sufficient length of interfacing cable, which can be taken near to the chuck for job setting and similar other purposes.	Vendor to offer	

SNO	CFFP/BHEL,HARDWAR REQUIREMENT	VENDOR TO CONFIRM/ SPECIFY	VENDOR'S OFFER WITH TECHNICAL DETAILS AND REMARKS
2.10.2	**MAIN CONTROL DESK**		
2.10.2.1	Complete control of machine with required switches / keys should be provided on Control desk for selection of required axis, axis direction, cutting feed, table / spindle rpm, cutting feed on/off, display of axis position values etc.	Vendor to confirm & submit Detailed Layout.	
2.10.3	**FAULT DIAGNOSTIC SYSTEM**		
2.10.3.1	Vendor should offer a PC NOTE BOOK along with PLC & Drive software (licensed copy), necessary cables, required hardwares/Adaptors (for Communication with the PLC/Drive system). The Note Book PC should be loaded with complete Electrical Schemes, Mechanical Assembly drawings, Hydraulic Circuit Diagrams, Operation and Maintenance Manuals, Machine Alarm list along with Help text wiring diagram, On-Line display of PLC user logic should be available on the note book PC. Procedure of fault diagnostic system and data transfer/PLC logic transfer between PC Notebook & PLC/Drive system should be demonstrated to BHEL during commissioning of the machine	Vendor should offer and submit	
2.11	**MACHINE LIGHTS:**		
2.11.1	Machine Lights for sufficient illumination of complete working area on both sides of operator's platform should be provided for clear visibility.	Vendor to offer & specify details.	
2.11.2	A magnetic base portable spot light with sufficiently long cable should also be provided.	Vendor to offer and submit details	
2.11.3	Any lights required in the foundation/ pit area shall also be foreseen and supplied by the vendor.	Vendor to offer & specify details.	
2.11.4	All light fittings, consumables, adapters/receptacles should have compatibility with Indian equivalents	Vendor to confirm	
2.12	**AIR CONDITIONERS:**		
2.12.1	It will be preferred if the electrical controls work effeciently without AC and Dehumidifers within the specified conditions. However, if provided, then Air Conditioners with Dehumidifiers of suitable/ sufficient capacity and proper drainage pipes for condensate, are to be provided for all Electrical/ Electronic Panels/ Cabinets including operator’s Panel considering specified ambient conditions. Detailed specifications of the same are to be submitted. The Air Conditioners are not to be mounted on top of the panels.	Vendor to offer and submit details.	
2.12.2	In case of order, vendor shall confirm to supply the following information about Air Conditioners and Chiller Unit (s) used in the machine: Type of Refrigeration/ Chiller unit. Capacity of the chiller unit. Type of compressor with complete specifications. Type of Thermostatic Expansion Valve with complete specifications. Fan size and flow in CFM (cubic feet meter) of the Condenser unit. Specifications of the Evaporator Unit (Width Plate type/ Coil type) Functional requirement of temperature of Cooling Oil to be maintained between range T1 to T2. Type of temperature indicator/ controller used in the chiller unit with complete specifications.	Vendor to confirm	

SNO	CFFP/BHEL,HARDWAR REQUIREMENT	VENDOR TO CONFIRM/ SPECIFY	VENDOR'S OFFER WITH TECHNICAL DETAILS AND REMARKS
2.13	**HYDRAULIC SYSTEM**		
2.13.1	Pumps,Valves,Switches (Pressure & Flow) should be of make: Rexroth/Vickers/Parker/Hawe	To confirm & submit details	
2.13.2	Filtration System	To specify	
2.13.3	Failure indication for complete hydraulic system	To confirm & submit details	
2.13.4	Automatic shut off provision. Details should be submitted.	To confirm & submit details	
2.13.5	Refrigerated type cooling and electric heating (Elecrtic heating only if required) system of sufficient capacity to maintain complete Hydraulic System, including lubrication oil, hydrostatic oil and gearbox oil, etc. at a temperature not exceeding 40 deg C irrespective of the ambient conditions. Complete details should be submitted	To confirm & submit details	
2.13.6	Hydraulic pump capacity (flow / pressure)	To specify	
2.13.7	Each pump should have an independent motor. Tandem pumps should not be used	Vendor to confirm	
2.13.8	First filling of all required Oils & Grease etc. to be supplied by vendor. Indigenous (Indian) source or Indian equivalent and specifications of oils/ greases are also to be provided by the vendor.	Vendor to confirm	
2.13.9	All the hoses and end connections of lubrication & hydraulics system required in Metric system only	Vendor to confirm	
2.13.10	All hydraulic oil used on the machine must have Indian make equivalent	Vendor to confirm & Specify	
2.13.11	Hydraulic Oil Tank should preferably be located at Floor level.	Vendor to confirm	
2.13.12	Complete hydraulic system should be designed to avoid any leakge or spillage	Vendor to confirm	
2.14	**LUBRICATION SYSTEM**		
2.14.1	There should be centralised Lubrication system for both heads & cross rail movement system	Vendor to confirm & submit detail	
2.14.2	Lubrication system of all Drive Gear box/Gearing system/Bearings	Vendor to confirm & submit detail	
2.14.3	Interlocking of Table lubrication & Table drive in case of Lubrication failure	Vendor to confirm & submit detail	
2.15	**ELECTRICAL :**		
2.15.1	415V +10% / -10%, 50HZ +/- 3 HZ, 3 Phase AC (3 wire system without neutral) Power Supply Source will be provided by BHEL at a single point near the machine, as per layout recommended by Vendor. All types of cables, connections, circuit breakers etc. required for connecting BHEL's power supply point to different parts of the machine/ control cabinets, etc., shall be the resposibility of vendor. Requirement of grounding/ earthing with required material (indian make) details is to be informed by vendor well in advance so that same could be incorporated during construction of foundation.	To confirm	
2.15.2	**Tropicalisation:** All electrical / electronic equipment shall be tropicalized	To confirm	
2.15.3	Complete panels to be fuseless except Thyristor drives, where thyristor protection fuses are to be used. In all other cases MCCBs/ MPCBs etc. to be used.	To confirm	
2.15.4	PLCs, Drives & basic electrical equipments like contactors, MPCBs,MCCBs ACBs etc. to be Siemens/Fanuc make	To confirm	

SNO	CFFP/BHEL,HARDWAR REQUIREMENT	VENDOR TO CONFIRM/ SPECIFY	VENDOR'S OFFER WITH TECHNICAL DETAILS AND REMARKS
2.15.5	PLCs & drives to have profibus / Ethernet communication capability. PLC programming software / application software must be supplied in soft copy.	To confirm	
2.15.6	Indicating lamps to be high luminous type LED's	To confirm	
2.15.7	All cables to have bottom entry into panels. Power & Control terminals to be grouped separetely with 10% extra terminals in each group.	To confirm	
2.15.8	One extra module of each type PLC module to be provided (Min one module each of DI, DO, AI & AO).	To confirm	
2.15.9	In general the control vaoltage is to be single phase 220V,50Hz,AC.	To confirm	
2.15.10	All panels should be provided with voltmeter , ammeter and energy meter.They should also contain phase indicating LED's in incoming supply.	To confirm	
2.15.11	All electrical & electronic control cabinets & panels should be dust and vermin proof	To confirm	
2.15.12	All electrical components in the cabinets should be mounted on DIN Rail	To confirm	
2.15.13	All electrical and electronic panels including operator's panel should be provided with fluorescent lamps for sufficient illumination and power receptacles of 220Volts, 5/15 Amp AC. All adapters/receptacles should have compatibility with Indian equivalents.	To confirm	
2.15.14	Motors shall confirm to IEC or Indian Standards. Vendor to confirm that Main drive & Feed motors will be natural/air cooled. Vendor to provide test certificates for all the motors	To confirm	
2.15.15	All cables moving with traversing axes should be installed in caterpillar / Drag chain. Additionally, all the cable trays required for laying of cables should be included in the offer.	To confirm	
2.15.16	Vendor should ensure the proper earthing for the machine and its peripherals/accessories. Any material requirement for the same should be informed with foundation design/drawings.The vendor can take earthing connection from the nearest column of the production shop.	To confirm	
2.16	**SAFETY ARRANGEMENTS**		
	Following safety features in addition to other standard safety features should be provided on the machine:	To confirm	
2.16.1	Machine should have adequate and reliable safety interlocks / devices to avoid damage to the machine, workpiece and the operator due to the malfunctioning or mistakes. Machine functions should be continuously monitored and alarm / warning indications through lights/ alarm should be available.	To confirm	
2.16.2	A detailed list of all alarms / indications provided on machine should be submitted by the supplier.	To confirm & submit	
2.16.3	All the pipes, cables etc. on the machine should be well supported and protected. These should not create any hinderance to machine operator's movement for effective use of machine.	To confirm	
2.16.4	All the rotating parts used on machine should be statically & dynamically balanced to avoid undue vibrations.	To confirm	
2.16.5	Emergency Switches at suitable locations as per International Norms should be provided.	To confirm	
2.16.6	Oil lines should not run with electrical cable in the same tray / trench.	To confirm	

SNO	CFFP/BHEL,HARDWAR REQUIREMENT	VENDOR TO CONFIRM/ SPECIFY	VENDOR'S OFFER WITH TECHNICAL DETAILS AND REMARKS
2.17	**ENVIRONMENTAL PERFORMANCE OF THE MACHINE :**	To specify	
	The Machine shall conform to following factors related to environment :		
2.17.1	Maximum noise level shall be 85 dB(A) at normal load condition, 1 meter away from the machine with correction factor for back ground noise, if necessary. This will be measured as per international standards like DIN 45635-16. Supplier to demonstrate compliance to noise level, if so required.	To confirm	
2.17.2	There shall not be any emissions from the machine	To confirm	
2.17.3	There should not be any effluent from the machine. In case there are any effluents from the machine, requisite effluent treatment plant or pollution control device should be built into the machine by the supplier.	To confirm	
2.17.4	There should not be any oil leakage from the machine. Proper oil collection system to be provided to kep the machine area oil free	To confirm	
2.17.5	No hazardous chemicals shall be required to be used in the machine.	To confirm	
2.17.6	If any safety / environmental protection enclosure is required it should be built in the machine by the vendor.	To confirm	
2.17.7	Paint of the machine should be oil / coolant resistant and should not peel off	To confirm	
3.0	**SERVO VOLTAGE STABILIZER:**		
3.1	Indian make Oil / Air Cooled Servo Controlled Voltage Stabilizer suitable for complete machine, its drives, controls, PLCs etc for unbalaned load & supply conditions considering specified power supply & ambient conditions	Vendor to offer	
4.2	Make(Neel or Servomax or Aplab or equivalent reputed Indian manufacturer)	Vendor to inform	
4.3	Make, Rating & Input/Output voltage etc.	Vendor to inform	
4.4	Catalogue of the Voltage stabilizer shall be submitted with the offer.	Vendor to submit	
4.5	First filling of all required Oils to be supplied by vendor	To confirm	
4.0	**ULTRA ISOLATION TRANSFORMER**		
4.1	Indian make Ultra Isolation Transformer suitable for complete machine, its drives, controls, PLCs, etc. for unbalaned load & supply conditions considering specified power supply & ambient conditions	Vendor to offer	
4.2	Make(Neel or Servomax or Aplab or equivalent reputed Indian manufacturer)	Vendor to inform	
4.3	Make, Rating & Input/Output voltage etc.	Vendor to inform	
4.4	Catalogue of the Ultra Isolation Transformer shall be submitted with the offer.	Vendor to submit	
4.5	First filling of all required Oils to be supplied by vendor	To confirm	
5.0	**PNEUMATIC SYSTEM:**		
5.1	Vendor to specify any requirement of compressed air supply for the operation of the machine.If so, then the system should be so designed to have additional provision and required accessories before Refrigerated type Air Dryer so that **BHEL compressed air supply having pressure 5 Kg/sq.cm with high moisture could be used as and when required**.	To specify	

SNO	CFFP/BHEL,HARDWAR REQUIREMENT		VENDOR TO CONFIRM/ SPECIFY	VENDOR'S OFFER WITH TECHNICAL DETAILS AND REMARKS
6.0	**MEASURING SYSTEMS:**			
6.1	DRO for all movements (Min. Resolution 0.01mm)		To specify & confirm	
7.0	**LEVELING & ANCHORING SYSTEM**			
7.1	Complete set of anchoring materials including foundation bolts,nuts, washers, fixators, leveling shoes etc. for alignment of the table/ram and to fix the machine to the foundation should be supplied.		To confirm & submit details	
8.0	**TOOLS FOR ERECTION, OPERATION & MAINTENANCE :**			
8.1	Tools and equipment required for erection of the machine shall be brought by the vendor. Necessary tools like Torque Wrenches, Set of job clamping accessories (T-nuts, Studs, Clamp supports), Spanners, Keys, grease guns etc.for operation and maintenance of the machine should be supplied. List of such tools should be submitted with offer		Vendor to offer	
8.2	Set of Test mandrels/Cylindrical bars for checking run-out/taper & alignment should be supplied with protection boxes		Vendor to offer	
9	**SPARES:**			
9.1	Itemised breakup of mechanical, hydraulic, electrical and electronic spares used on the machine in sufficient quantity as per recommendation of Vendor for 2 years of trouble free operation on three shifts continuous running basis should be offered by vendor. The list to include following, in addition to other recommended spares: **(Unit Price of each item of spare should be offered)**		Vendor to offer	
9.1.1	ESSENTIAL SPARES			
9.1.1.1	Mechanical			
9.1.1.1.1	O' Rings	5 nos. of each type	Vendor to offer	
9.1.1.1.2	Seals	5 nos. of each type	Vendor to offer	
9.1.1.1.3	Belts	5 nos. of each type	Vendor to offer	
9.1.1.1.4	Filter /Filter Inserts(If reusable)	5 nos. of each type	Vendor to offer	
9.1.1.1.5	Filter /Filter Inserts(If disposable)	20 nos. of each type	Vendor to offer	
9.1.1.1.6	All directional, pressure & flow control valves including servo valves	2 Nos of each type	Vendor to offer	
9.1.1.1.7	All pressure switches, flow switches & float switches	2 Nos of each type	Vendor to offer	
9.1.1.1.8	Pump with motor (Hydraulic)	1 unit of each type	Vendor to offer	
9.1.1.1.9	Pump with motor (Lubrication)	1 unit of each type	Vendor to offer	
9.1.1.1.10	Flexible Pipes with End Connections	5 nos. of each type	Vendor to offer	
9.1.1.1.11	Connectors of all types used with hydraulic & lubrication pipes	20 nos. of each type	Vendor to offer	
9.1.1.1.12	Clutches of all types	2 Set	Vendor to offer	
9.1.1.1.13	Pressure gauge	1 no. of each type	Vendor to offer	
9.1.1.1.14	Box Nut & Lead/Ball Screws	2 no. of each type	Vendor to offer	
9.1.1.1.15	Taper wedge	1 set of each type	Vendor to offer	
9.1.1.2	Electrical			
9.1.1.2.1	Fuses			
9.1.1.2.1.1	Semiconductor fuse for Various Drives	5 nos. of each type	Vendor to offer	

SNO	CFFP/BHEL,HARDWAR REQUIREMENT		VENDOR TO CONFIRM/ SPECIFY	VENDOR'S OFFER WITH TECHNICAL DETAILS AND REMARKS
9.1.1.2.2	Control elements			
9.1.1.2.2.1	Relay cards for PLC output	2 nos.	Vendor to offer	
9.1.1.2.2.2	Auxiliary Contactors	4 nos. of each type	Vendor to offer	
9.1.1.2.2.3	Power Contactors	1 no. of each type	Vendor to offer	
9.1.1.2.2.4	Main Circuit breaker	1 no.	Vendor to offer	
9.1.1.2.2.5	Micro Switches	4 nos. of each type	Vendor to offer	
9.1.1.2.2.6	Temperature Sensors	2 nos. of each type	Vendor to offer	
9.1.1.2.2.7	MCB	2 nos. of each type	Vendor to offer	
9.1.1.2.2.8	MPCB	2 nos. of each type	Vendor to offer	
9.1.1.2.3	Control switches			
9.1.1.2.3.1	Push button green	5 nos.	Vendor to offer	
9.1.1.2.3.2	Push button red	5 nos.	Vendor to offer	
9.1.1.2.3.3	Emergency stop push button	5 nos.	Vendor to offer	
9.1.1.2.3.4	Signal lamp green	10 nos.	Vendor to offer	
9.1.1.2.3.5	Signal lamp red	10 nos.	Vendor to offer	
9.1.1.2.3.6	Selector Switches	3 nos. of each type	Vendor to offer	
9.1.1.2.4	Limit switches			
9.1.1.2.4.1	Limit Switches/Proximity Switches	2 nos.	Vendor to offer	
9.1.1.3	Electronics			
9.1.1.3.1	Power Supply Module	1 No. of each type of module used	Vendor to offer	
9.1.1.3.2	Power Cable with end connectors	2 Nos of maximum length used	Vendor to offer	
9.1.1.3.3	Signal Cable with end connectors	2 Nos of maximum length used	Vendor to offer	
9.1.1.3.4	PLC Digital Input & Output Modules	1 No. of each type of module used	Vendor to offer	
9.1.1.3.5	PLC Analog Input & Output Modules	1 No. of each type of module used	Vendor to offer	
9.1.1.3.6	Interface Module	1 No.	Vendor to offer	
9.1.1.4	Drive			
9.1.1.4.1	Line module for Table drive	1 No.	Vendor to offer	
9.1.1.4.2	Line module for feed drive	1 No. of each type	Vendor to offer	
9.1.1.4.3	Single Motor module for Table	1 No.	Vendor to offer	
9.1.1.4.4	Single Motor module for feed	1 No. of each type	Vendor to offer	
9.1.1.4.5	Control unit for Table	1 No.	Vendor to offer	
9.1.1.4.6	Control unit for feed	1 No. of each type	Vendor to offer	
9.1.1.5	Servo Motor			
9.1.1.5.1	Servo motors for feed	1 No. of each type	Vendor to offer	
9.1.1.6	OPERATIONAL SPARES OF SERVO STABILIZER			
9.1.1.6.1	Voltage Regulator PCB	1 No.	Vendor to offer	
9.1.1.6.2	Under & Over Voltage PCB	1 No.	Vendor to offer	
9.1.1.6.3	Servo Motor	1 No.	Vendor to offer	
9.1.1.6.4	Control Transformer	1 No.	Vendor to offer	
9.1.1.6.5	Toggle Switches	2 Nos.	Vendor to offer	
9.1.1.6.6	A.C. Voltmeter	1 No.	Vendor to offer	
9.1.1.6.7	Micro Switches	2 Nos.	Vendor to offer	
9.1.1.6.8	LED Set	2 Nos.	Vendor to offer	
9.1.1.6.9	Glass Fuses	10 Nos.	Vendor to offer	
9.1.1.6.10	Carbon Brush	3 Nos.	Vendor to offer	
9.1.1.6.11	Motor Gear	1 Set	Vendor to offer	
9.1.1.6.12	Variac Gear	1 Set	Vendor to offer	
9.1.1.6.13	Variable Auto Transformer	1 No.	Vendor to offer	

SNO	CFFP/BHEL,HARDWAR REQUIREMENT	VENDOR TO CONFIRM/ SPECIFY	VENDOR'S OFFER WITH TECHNICAL DETAILS AND REMARKS
9.2	All types of spares for total machine and accessories should be available for atleast ten years after supply of the machine. If machine or control is likely to become obsolete in this period, the vendor should inform BHEL sufficiently in advance and provide drawings of parts / details of spares & suppliers to enable BHEL to procure these in advance, if required.	Vendor to confirm	
9.3	Vendor to confirm that complete list of spares for machine and accessories, along with specification/ type/ model, and name & address of the spare supplier shall be furnished along with documentation to be supplied with the machine.	Vendor to confirm	
10.0	**DOCUMENTATION :** Five sets of following documents (Hard copies) and two sets of soft copies(Pen drive) in English language should be supplied along with the machine	Vendor to confirm	
10.1	Operating manuals of Machine	Vendor to confirm	
10.2	Detailed Maintenance manual of machine with all drawings of machine assemblies(Including part Details)/sub-assemblies/parts including Electrical / Pneumatic/ Hydraulic circuit diagrams. All Assembly/ Sub Assembly Drawings to be supplied with the part list also. Part Drawing of Lead/Ball Screw & Box Nut must be supplied.	Vendor to confirm	
10.3	Maintenance & commissioning manuals	Vendor to confirm	
10.4	Manufacturing drawings for all supplied tool holders, adapters, sleeves, fixtures etc.	Vendor to confirm	
10.5	Catalogues, O&M Manuals of all bought out items including drawings,wherever applicable.	Vendor to confirm	
10.6	Detailed specification of all rubber items and hydraulic/lube fittings	Vendor to confirm	
10.7	Operating Manuals, Maintenance Manuals & Catalogues for supplied Voltage Stabilizer, Isolation Transformer, and all supplied Accessories.	Vendor to confirm	
10.8	Complete Master List of parts used in the machine shall be submitted by the vendor.	Vendor to confirm	
10.9	All drawings to be made available by Vendor at the time of PDI in English language only	Vendor to confirm	
11	**TRAINING**		
11.1	Four BHEL Persons should be trained at vendor's works for each machine for the area & period given below: (a) Electrical, Electronic maintenance for machine & other supplied equipments (Period 2 weeks) (b) Mechanical & Hydraulic maintenance of the machine & other supplied equipments (Period 2 weeks) (c) Operation of the machine & other supplied equipments (Period 2 weeks) (d) Training on PLC/NC Features of the machine (Period 2 weeks) Pre-dispatch inspection (ref. **Sl.No. 17.1)** of the machine shall also be carried out by the team during their stay at vendor's works for the training. Vendor may specify days required for pre-dispatch inspection. BHEL reserves the right to choose no. of persons, field & period of training, out of above, while deputing their engineers for training.	Vendor to confirm & offer	
11.2	Air-fare, boarding & lodging for the trainees shall be borne by BHEL.	Vendor to confirm	
11.3	Competent, English speaking experts shall be arranged by the vendor during training for satisfactory & effective training of BHEL personnel.	Vendor to confirm	
11.4	Vendor should commit to organize training of BHEL Engineer for advanced features and specialised training if so required by BHEL.	Vendor to confirm	

SNO	CFFP/BHEL,HARDWAR REQUIREMENT	VENDOR TO CONFIRM/ SPECIFY	VENDOR'S OFFER WITH TECHNICAL DETAILS AND REMARKS
12.0	**FOUNDATION :**		
12.1	Constructed foundation is already available in Machine shop- CFFP. Vendor to design the equipment suiting to this foundation. Drawings enclosed for reference CFFP/PMG/VBM/01, CFFP/PMG/VBM/02, CFFP/PMG/VBM/03, CFFP/PMG/VBM/04 & CFFP/PMG/VBM/05. If required, vendor may depute their representative for physical verification/ onsite inspection of foundation.	Vendor to confirm	
12.2	Dynamic soil parameters are as follows: (i) Cu = 4.937 kg/cm^3 (for block size of 1.5 m x 1m x1m) Cu = 1.667 kg/cm^3 (for foundation size of 10 M^2 or more) (ii) CΦ = 9.70 kg/cm^3 (iii) CΨ = 4.20 kg/cm^3 Bearing Capacity: Depth : 5 M From Shear consideration : 39 T/M^2 Fom Settelement consideration : 9-10 T/M^2 Recommended B.Capacity : 9 T/M^2	For vendor's information.	
13.0	**ERECTION & COMMISSIONING**		
13.1	Supplier to take full responsibility for carrying out the erection, start up, testing of machine, it's control & all types of other supplied equipment , machining of test pieces etc. Service requirement like power, air & water shall be provided by BHEL at only one point to be indicated by supplier in their foundation/layout drawings. Other requirements like crane and helping personnel shall also be provided by BHEL. Details of these requirements should be informed by vendor in advance.	To confirm	
13.2	Erection & Commissioning of Voltage stabilizer, Isolation Transformer shall also be responsibility of the vendor.	To confirm	
13.3	Successful proving of BHEL components by the supplier shall be considered as part of commissioning. All tests, as mentioned at **Clause no.17** (Machine Acceptance) shall form part of the commissioning activity.	To confirm	
13.4	Test mandrel for checking run-out/taper & alignment should be supplied by the vendor	To confirm	
13.5	Tools, Tackels, Test Mandrels, instruments and other necessary equipment required to carry out all above activities should be brought by the supplier.	To confirm	
13.6	Commissioning spares, required for commissioning of the machine within stipulated time, shall be brought by the supplier on returnable basis.	To confirm	
13.7	All Cover Plates required for the machine and its peripherals including pits, if any, shall be supplied and installed by the vendor. The plates should be sourced from India	To confirm	
13.8	Portion, if any, of the machine, accessories and other supplied items where paint has rubbed off or peeled during transit or erection should be repainted and merged with the original surrounding paint by the vendor. For this purpose, the vendor should supply sufficient quantity of touch-up paint of various colours of paint used.	To confirm	
13.9	Schedule of Erection and Commissioning shall be submitted with the offer.	To specify	
13.10	Charges, duration, terms & conditions for E&C should be furnished in detail separately by vendor along with offer.	To specify	

SNO	CFFP/BHEL,HARDWAR REQUIREMENT	VENDOR TO CONFIRM/ SPECIFY	VENDOR'S OFFER WITH TECHNICAL DETAILS AND REMARKS
14.0	**MACHINE ACCURACIES :**		
14.1	**GEOMETRICAL ACCURACIES :**		
14.1.1	Geometrical Accuracy Tests shall be in accordance with applicable ISO standard or equivalent applicable standard. Detailed Test Charts for the same, clearly showing the accuracies to be achieved on the machine, shall also be Submitted with the offer.	To specify	
14.1.2	Table flatness : 0.1 mm upto 1000 mm Dia.(Further 0.03 mm for each 1000 mm)	To confirm	
14.1.3	Table runout : 0.05 mm upto 1000 mm Dia.(Further 0.02 mm for each 1000 mm)	To confirm	
14.1.4	Movement of Ram w.r.t faceplate: Vertical - 0.05 mm on 1000 mm Horizontal - 0.05 mm on 1000 mm	To confirm	
14.1.5	All other accuracies to conform to specified standard (latest revision) or Suppliers Test chart whichever is finer and more accurate	Vendor to confirm & Submit	
14.1.6	All the above accuracies should be demonstrated to BHEL engineers during pre-acceptance at Suppliers works and during Erection & Commissioning at BHEL Works.	To confirm	
15.0	**AMBIENT CONDITIONS & THERMAL STABILITY :**		
15.1	Total machine including all supplied items should work trouble free and efficiently under following operating conditions and should give specified accuracies. Power Supply: Voltage: 415 V - 10%, +10% Frequency: 50 Hz +3%, - 3% No. of phases = 3 Ambient Conditions: Temperature = 0 to 50 degree celsius Relative Humidity = 95% max. (Vendor to confirm that machine is suitable for above and details of provisions on the machine for the same are to be furnished by Vendor)	To confirm	
15.2	Weather conditions are tropical, Atmosphere may be dust laden during some part of the year. Machine shall be kept in the normal shop floor condition. Max. temperature variation is up to 25 deg Celsius in 24 hours. (Vendor to confirm that machine is suitable for above and details of provisions on the machine for the same are to be furnished by Vendor)	To confirm	
15.3	Thermal Stability of the complete machine keeping in view specified Ambient Conditions and accuracy requirements of BHEL components and trouble free operation of the machine should be ensured by vendor. (Confirm that machine is suitable for above and details of provisions on the machine for the same should be furnished)	To confirm	
15.4	The machine, including attachments and accessories, should be suitable for 24 hrs. continuous operation to its full capacity for 24 hour a day and 7 days a week throughout. Vendor to ensure and confirm the same.	To confirm	

SNO	CFFP/BHEL,HARDWAR REQUIREMENT	VENDOR TO CONFIRM/ SPECIFY	VENDOR'S OFFER WITH TECHNICAL DETAILS AND REMARKS
16.0	**PROVEOUT OF BHEL COMPONENTS :**		
16.1	Likely jobs which shall be machined on this machine are as per drawings enclosed i.e. 04-VTB-01, 04-VTB-02, 04-VTB-03 & 04-VTB-04. Out of these, two components shall be likely proveout component. Job setting plan, Machining process plan & Requirement of Tools etc. for machining of proveout components shall be discussed and mutually agreed with vendor. Complete machining of prove out components shall be done by Vendor at BHEL works to the specified design accuracy and surface finish, using cutting tools & necessary setting, clamping & machining aids to be provided by the vendor to prove the machine after complete erection, tests & test piece machining etc. Vendor shall submit final job setting plan, machining process plan, tool layout & list with complete description, etc. for the proveout machining within two months of placement of order.	Vendor to confirm	
16.2	Vendor shall be fully responsible for machining of proveout components as per drawing and other requirements specified by BHEL to the full satisfaction of BHEL. Clarifications, if any required by vendor, regarding accuracy requirements of the proveout components, whether specified or not, should be discussed and cleared by vendor during initial technical discussions. Party to ensure deviation free machining within specified time limit.	Vendor to confirm	
17.0	**MACHINE ACCEPTANCE: (Tests/Activities should be Performed by Vendor)**	To confirm	
17.1	**Tests/Activities should be carried out at supplier's works on the machine before dispatch & at BHEL during commissioning :**	To confirm	
17.1.1	Geometrical accuracies	To confirm	
17.1.2	Positioning accuracies (If CNC machine is offered)	To confirm	
17.1.3	The machine should be tested for continuous running of 48 hrs. If any break down occurs during this test, the test should be repeated for 48 hrs from that time.	To confirm	
17.1.4	TURNING POWER TEST : Full load test to demonstrate the maximum power & cutting capacity of the machine.	To confirm	
17.1.5	Demonstration of all features of the machine, control system, all supplied attachments & accessories to their full capacity ant to the satisfaction of BHEL for efficient and effective use of the machine	To confirm	
17.1.6	Machining test piece as per VDI standard or any other equivalent standard . Vendor to arrange Test pieces and tooling for it's machining.	To confirm	
17.1.7	Proveout machining.	To confirm	
17.1.8	Two weeks supervision of independent operation of machine by BHEL after job proveout	To confirm	
17.1.9	Training of BHEL machine operators in operation of complete machine & accessories etc by the supplier's experts / engineers during their stay at BHEL works	To confirm	

SNO	CFFP/BHEL,HARDWAR REQUIREMENT	VENDOR TO CONFIRM/ SPECIFY	VENDOR'S OFFER WITH TECHNICAL DETAILS AND REMARKS
18.0	**PACKING:**		
18.1	Sea worthy & rigid packing for all items of complete machine, all accessories and other supplied items to avoid any damage/loss in transit.	To confirm	
18.2	When machine is despatched in containers, all small loose items shall be suitably packed in wooden boxes with proper supports to avoid collision of items within box. Other large items shall also be packed/fastened securely on suitable sleepers and its movement within containers shall be suitably arrested	To confirm	
18.3	The long and slender items should be apcked in boxes well supported by longitudinal steel angle frames with suitable strappings for encasement so that the packing becomes sturdy	To confirm	
18.4	Critical components such a ram or ram heads to be packed properly with above type of packing	To confirm	
18.5	In case of wooden packing, planks of 20-25 mm thick and 100-150mm wide needs to be suitably placed at close intervals for giving rigidity to packing appropriately.	To confirm	
18.6	Special care needs to be taken for packing of Electrical and Electronic Control Panels as well as other Precision components	To confirm	
18.7	Guideways of columns/Beds/Other structural members need to be protected and well packed	To confirm	
18.8	Wherever required, steel cages and supports are to be provided for making it damage proof in the transit	To confirm	
18.9	Wood used for packing should be seasoned and shall be free of termites.	To confirm	
18.10	The containers should be covered with provision for opening from Top	To confirm	
19.0	**GUARANTEE :**		
19.10	Guarantee for complete machine and all supplied sytems/accessories/attachments/equipments/items for 24 months from the date of acceptance of the machine.	To confirm	
20.0	**GENERAL :**		
20.1	Machine Model	To specify	
20.2	Total connected load (KVA): Operating Power Factor should be greater than 0.9 lagging. If it is less, then it should be corrected by suitable means.	To specify	
20.3	Floor area required (Length, Width, Height) for complete machine & accessories	To specify	
20.4	Painting of Machine / Electrical Panels : RAL 6011 Apple Green (Polyurethane Paint)	To confirm	
20.5	Total weight of the machine with break up of major parts/assemblies of the machine	To specify	
20.6	Weight of heaviest part of machine	To specify	
20.7	Weight of the heaviest assembly / sub-assembly of the Machine	To specify	
20.8	Dimensions of largest part/ sub-assembly/ assembly of the machine	To specify	
20.9	Vendor to submit, along with offer, reference list of customers where similar machines have been supplied mentioning broad specifications of the supplied machine i.e. Model, Table diameter, Load Capacity, Maximum Turning Diameter, Max Turning Height, Main Drive Rating, etc	To confirm	

SNO	CFFP/BHEL,HARDWAR REQUIREMENT	VENDOR TO CONFIRM/ SPECIFY	VENDOR'S OFFER WITH TECHNICAL DETAILS AND REMARKS
20.10	Detailed catalogues , sketch/ photographs of the m/c and accessories/ attachments should be submitted with the offer.	To confirm	
20.11	Hydraulic, Pneumatic & oil pipings should be preferably metallic except places where flexible pipings are essential.All the pipes required for the same shall be included in the standard scope of the machine.	To confirm	
20.12	Ladder is to be provided to access the machine elements located at the top of the column.	To confirm	
20.13	All items of the equipment in this specification shall be complete in all respects and any equipment not covered in the spec, but is considered essential for proper design and operation of the machine shall be included by the supplier. If the supplier feels that in his opinion, by his experience and in accordance with the modern practice any of the item specified, he is in a position to submit a better/ more suitable offer. He shall indicate them and submit the offer on the basis of the specifications he considers more suitable and capable of meeting the duty requirements and should clearly states its merits.	Vendor to offer & submit	
20.14	Reference list of the customers, to whom such machines have been supplied should be submitted with the offer, mentioning customer, M/c model, major specifications, year of supply etc.	Vendor to submit	
20.15	Oil & water piping should not be located in the tray / trench in which electrical cables are laid.	Vendor to confirm	
20.16	All Cover Plates required for the machine and its peripherals shall be supplied by the vendor.	Vendor to confirm	
20.17	Deviation, if any	Vendor to specify in detail	
21.0	**QUALIFYING CONDITIONS :**		
21.1	a) Only those vendors(OEMs) should quote, who have commissioned in the past (10) years (on the date of opening of Tender) at least one VERTICAL BORING MACHINE of same or higher sizes (Table size 4500mm , Load capacity 100MT & Max. Turning height 3600mm) and capable of achieving machining accuracies as required in proveout component mentioned at clause 16.1 either (i) in at least one country other than the country from where the machine tool will be supplied to establish vendor's (OEM's) global business activity or (ii) in India; and referred machine is presently working satisfactorily for more than one year after commissioning (on the date of opening of Tender). The vendor should have experience of manufacturing & supplying machines with Hydrostatic guideways and hydrostatic rotary table in the past ten years (on the date of opening of Tender) and should submit proof of the same b) However ,such Indian machine tool vendors (OEMs), who do not meet specified qualifying conditions, can quote if they have running Collaboration /Joint Venture /Joint Working Arrangement for manufacture of VERTICAL BORING MACHINE of same or higher sizes (Table size 4500mm , Load capacity 100MT & Max. Turning height 3600mm) with foreign machine tool manufacturer, who meets specified qualifying conditions. Such Indian machine tool vendors (OEMs) shall have to submit from their foreign partner a back to back guarantee for satisfactory performance of the offered machine in compliance to all specified tender requirements. BHEL reserves the right to accept or reject the OEMs based on the assessment of their technical and financial capability. In respect of Indian vendors (OEMs) against (b) above, BHEL reserves the right to accept or reject both the Indian vendors (OEMs) & their Foreign partners based on the assessment of their technical and financial capability.	Vendor to accept & confirm	
	The following informtion should be submitted by the vendor about the companies where referred machine (s) have been supplied. This is required from all the vendors for qualification of their offer.		

SNO	CFFP/BHEL,HARDWAR REQUIREMENT	VENDOR TO CONFIRM/ SPECIFY	VENDOR'S OFFER WITH TECHNICAL DETAILS AND REMARKS
21.2	Name of the customer/ company where referred machine is installed.	Vendor to inform	
21.3	Complete postal address of the customer.	Vendor to inform	
21.4	Month & Year of commissioning.	Vendor to inform	
21.5	Parameters of machine(s) supplied (Table size , Load capacity & Max. Turning height) and application for which the machine is supplied.	Vendor to inform	
21.6	Name and designation of the contact person of the customer.	Vendor to inform	
21.7	Phone, FAX no. and e-mail address of the contact person of the customer.	Vendor to inform	
21.8	Performance certificate from the customers regarding satisfactory performance of machine supplied to them (Original Certificate or Through E-mail directly from the customer). The original performance certificate may be returned after verification by BHEL, if required.	Vendor to submit	
21.9	BHEL reserves the right to verify the information provided by the vendor for the referred machine at their referred customer's works including machining accuracies. It shall be the responsibility of the vendor to facilitate the visit of BHEL's team at their referred customer's works. The Travel and Boarding expenses for BHEL personnel shall be borne by BHEL. In case the information provided by vendor is found to be false/incorrect, the offer shall be rejected.	Vendor to accept & confirm	

FIRST ANGLE PROJECTION (ALL DIMENSIONS ARE IN mm)

DRAWING NO. Sheet 1/1

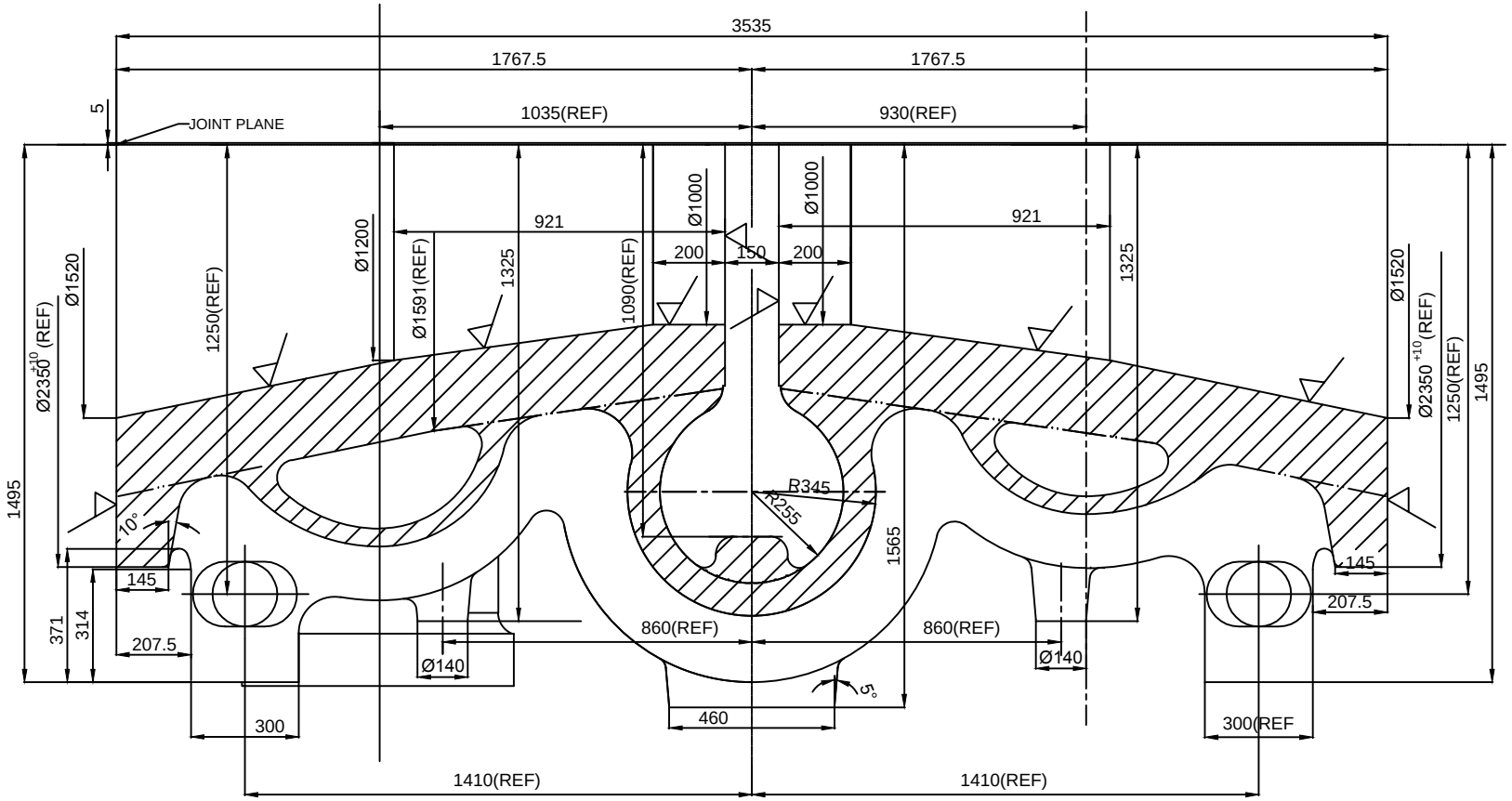

NOTE:

1. Surface Finish 3.2 microns on machined surfaces.
2. Tolerance : Outside Dimensions +0.5, -0
   InsideDimensions +0, -0.5
3. Runout of all diameters to be within 0.1mm.
4. Perpendicularity of surfaces to be within 0.1mm.

CASTING	BEFORE MACHINING WT.: 34600 KG AFTER MACHINING WT.: 33150 KG
	DRG. NO: 04-VTB-01
	SHEET NO: / NO. OF SHEETS

FIRST ANGLE PROJECTION (ALL DIMENSIONS ARE IN mm)

DRAWING NO. sheet 1/1

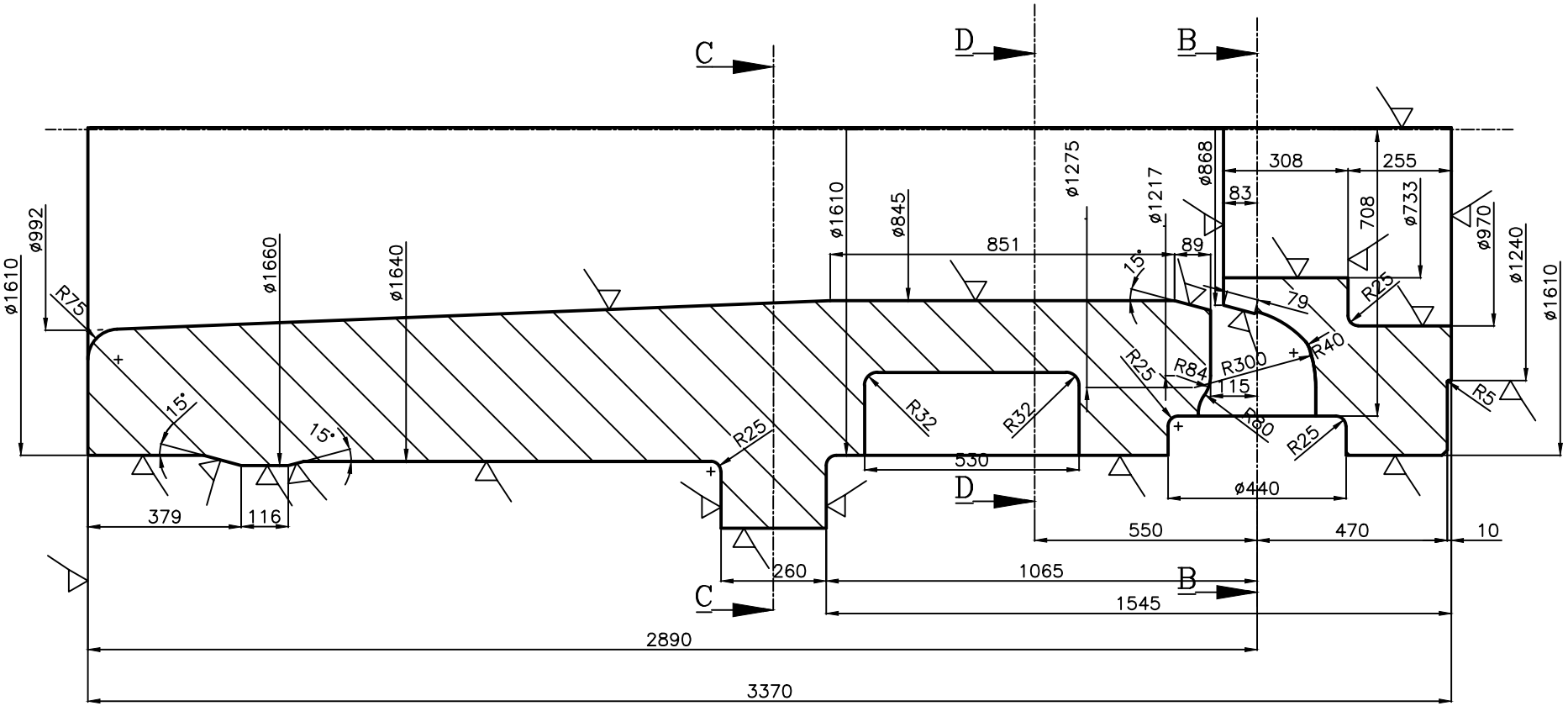

Section A–A

NOTE:

1. Surface Finish 3.2 microns on machined surfaces.
2. Tolerance : Outside Dimensions +0.5, -0
   InsideDimensions +0, -0.5
3. Runout of all diameters to be within 0.1mm.
4. Perpendicularity of surfaces to be within 0.1mm.

CASTING	BEFORE M/C WT.:20750KG AFTER M/C WT.:19400KG
	DRG. NO: 04-VTB-02
	SHEET NO: / NO. OF SHEETS

PRODUCED BY AN AUTODESK EDUCATIONAL PRODUCT

FIRST ANGLE PROJECTION (ALL DIMENSIONS ARE IN mm)

DRAWING NO. sheet 1/1

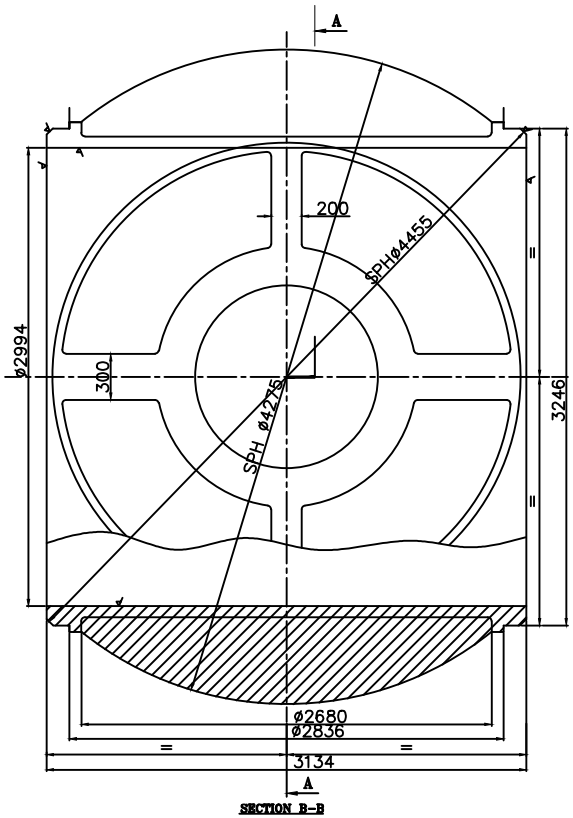

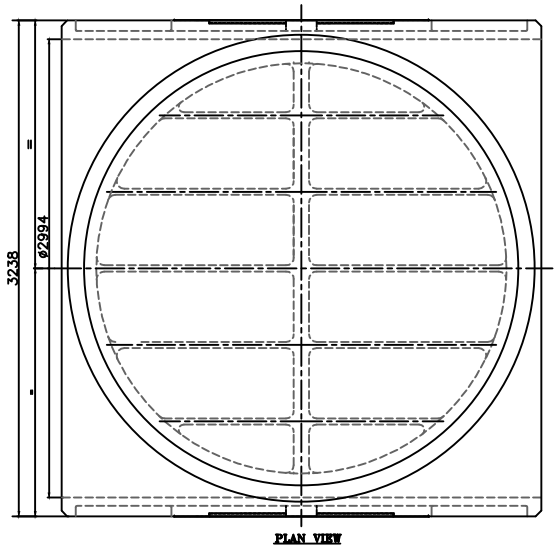

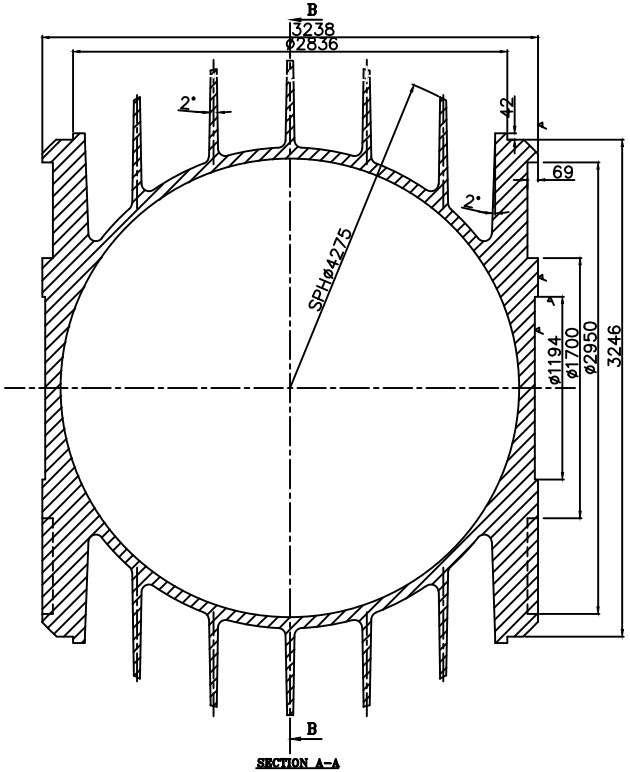

NOTE:

1. Surface Finish 3.2 microns on machined surfaces.
2. Tolerance : Outside Dimensions +0.5, −0
   InsideDimensions +0, −0.5
3. Runout of all diameters to be within 0.1mm.
4. Perpendicularity of surfaces to be within 0.1mm.

CASTING	BEFORE MACHINING WT. = 78000 Kgs. AFTER MACHINING WT. = 60000 Kgs.
	DRG. NO: 04−VTB−03
	SHEET NO:1 / NO. OF SHEETS:1

PRODUCED BY AN AUTODESK EDUCATIONAL PRODUCT

PRODUCED BY AN AUTODESK EDUCATIONAL PRODUCT

PRODUCED BY AN AUTODESK EDUCATIONAL PRODUCT

PRODUCED BY AN AUTODESK EDUCATIONAL PRODUCT

FIRST ANGLE PROJECTION (ALL DIMENSIONS ARE IN mm)

DRAWING NO. sheet 1/1

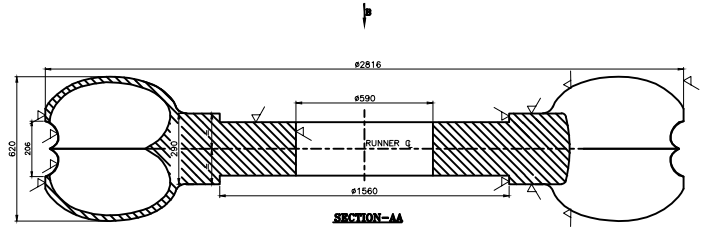

SECTION-AA

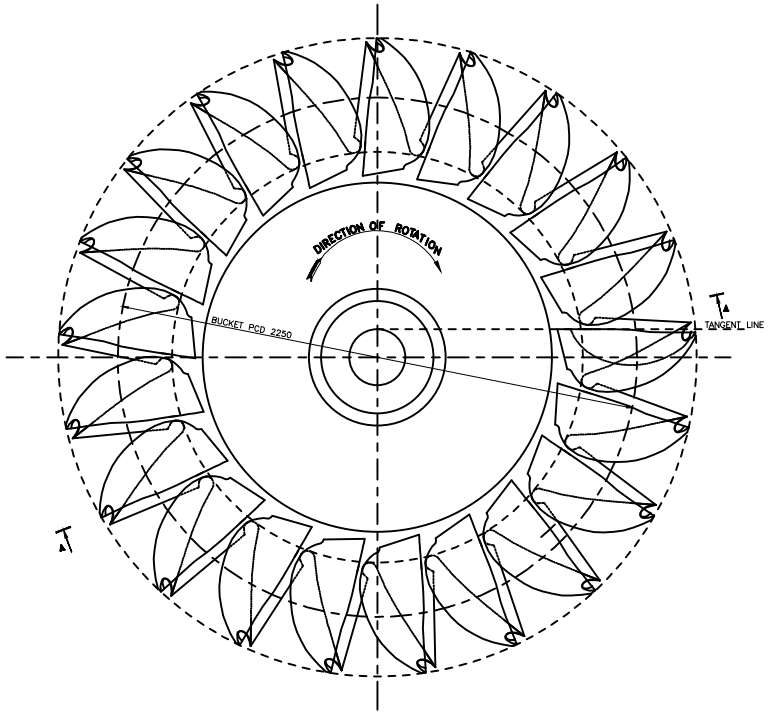

VIEW FROM 'B'

NOTE:

1. Surface Finish 3.2 microns on machined surfaces.
2. Tolerance : Outside Dimensions +0.5, −0
   InsideDimensions +0, −0.5
3. Runout of all diameters to be within 0.1mm.
4. Perpendicularity of surfaces to be within 0.1mm.

CASTING	BEFORE MACHINING WT. = 9100 Kgs. AFTER MACHINING WT. = 7500 Kgs.
	DRG. NO: 04−VTB−04
	SHEET NO: / NO. OF SHEETS

PRODUCED BY AN AUTODESK EDUCATIONAL PRODUCT

PRODUCED BY AN AUTODESK EDUCATIONAL PRODUCT

PRODUCED BY AN AUTODESK EDUCATIONAL PRODUCT

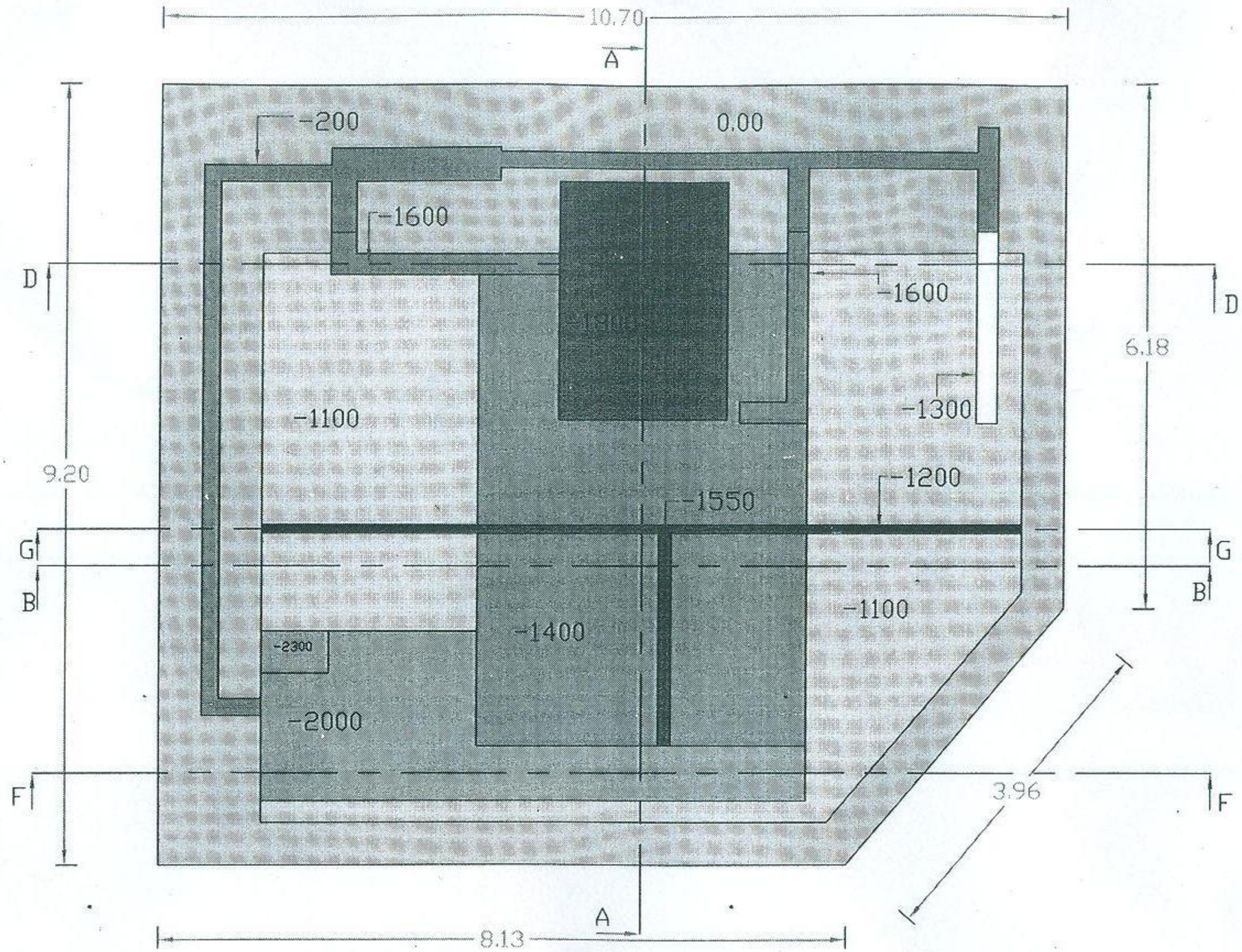

FOUNDATION PLAN

BHEL	BHARAT HEAVY ELECTRICALS LIMITED
	CENTRAL FOUNDRY FORGE PLANT
MACHINE NAME : VERTICAL BORING MACHINE	
DRAWING NAME : FOUNDATION DRAWING	
DRAWING NO : CFFP/PMG/VBM/01	

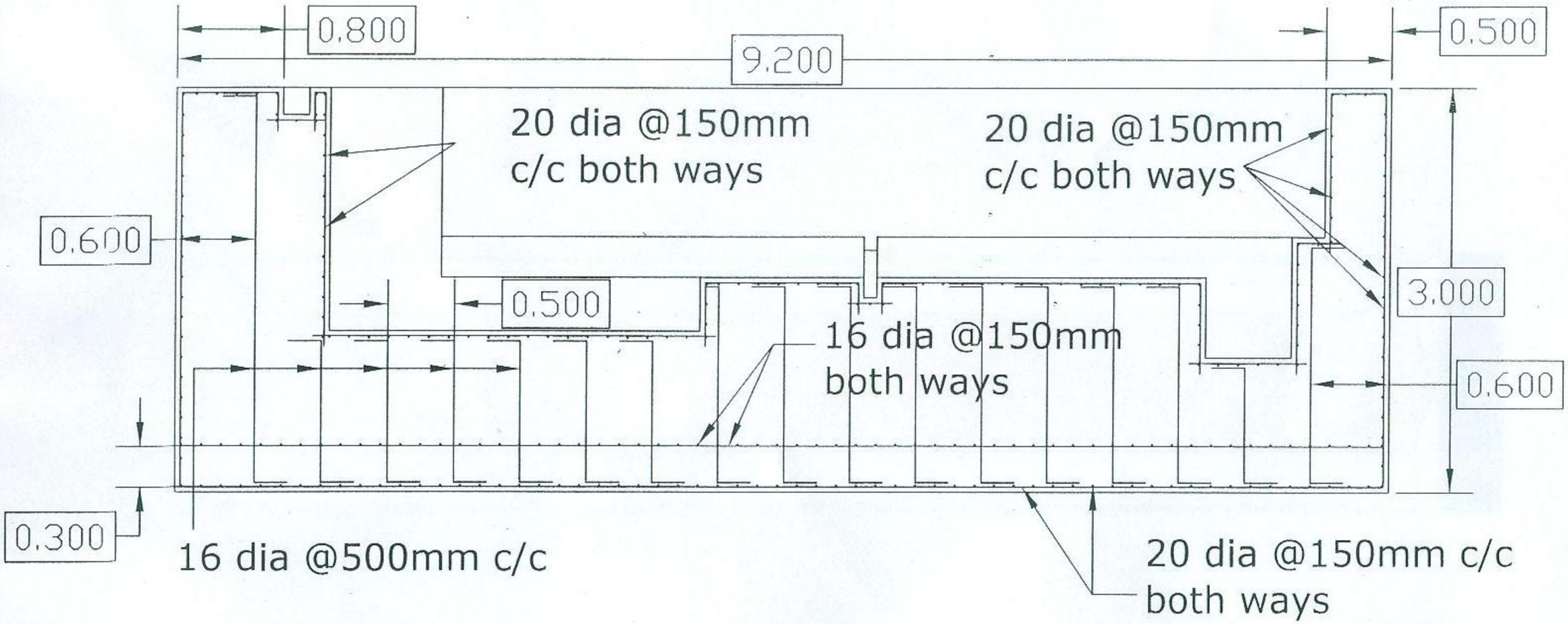

SECTION A-A

BHEL	BHARAT HEAVY ELECTRICALS LIMITED
	CENTRAL FOUNDRY FORGE PLANT
MACHINE NAME : VERTICAL BORING MACHINE	
DRAWING NAME : FOUNDATION DRAWING	
DRAWING NO : CFFP/PMG/VBM/02	

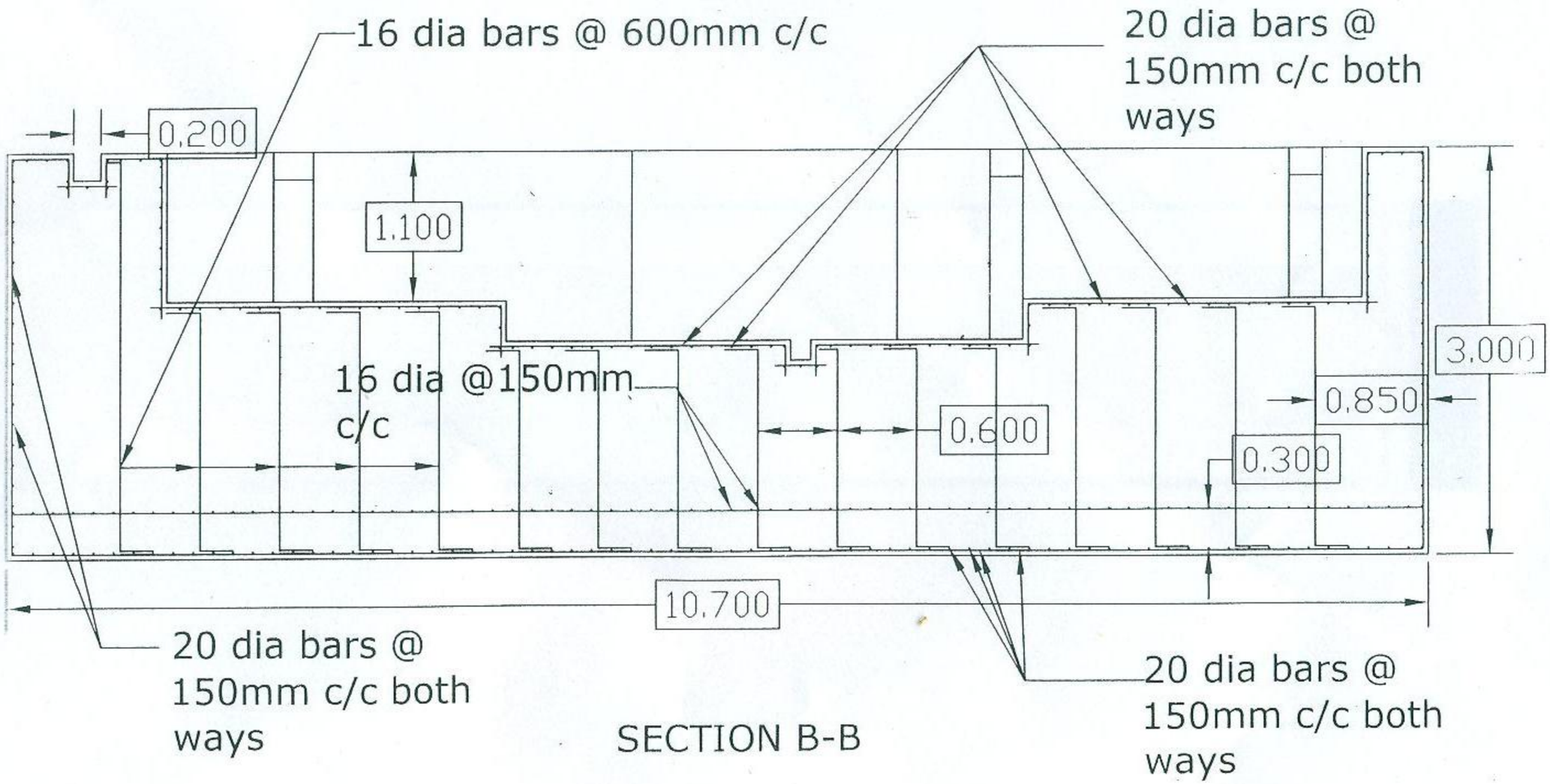

SECTION B-B

BHEL	BHARAT HEAVY ELECTRICALS LIMITED
	CENTRAL FOUNDRY FORGE PLANT
MACHINE NAME : VERTICAL BORING MACHINE	
DRAWING NAME : FOUNDATION DRAWING	
DRAWING NO : CFFP/PMG/VBM/03	

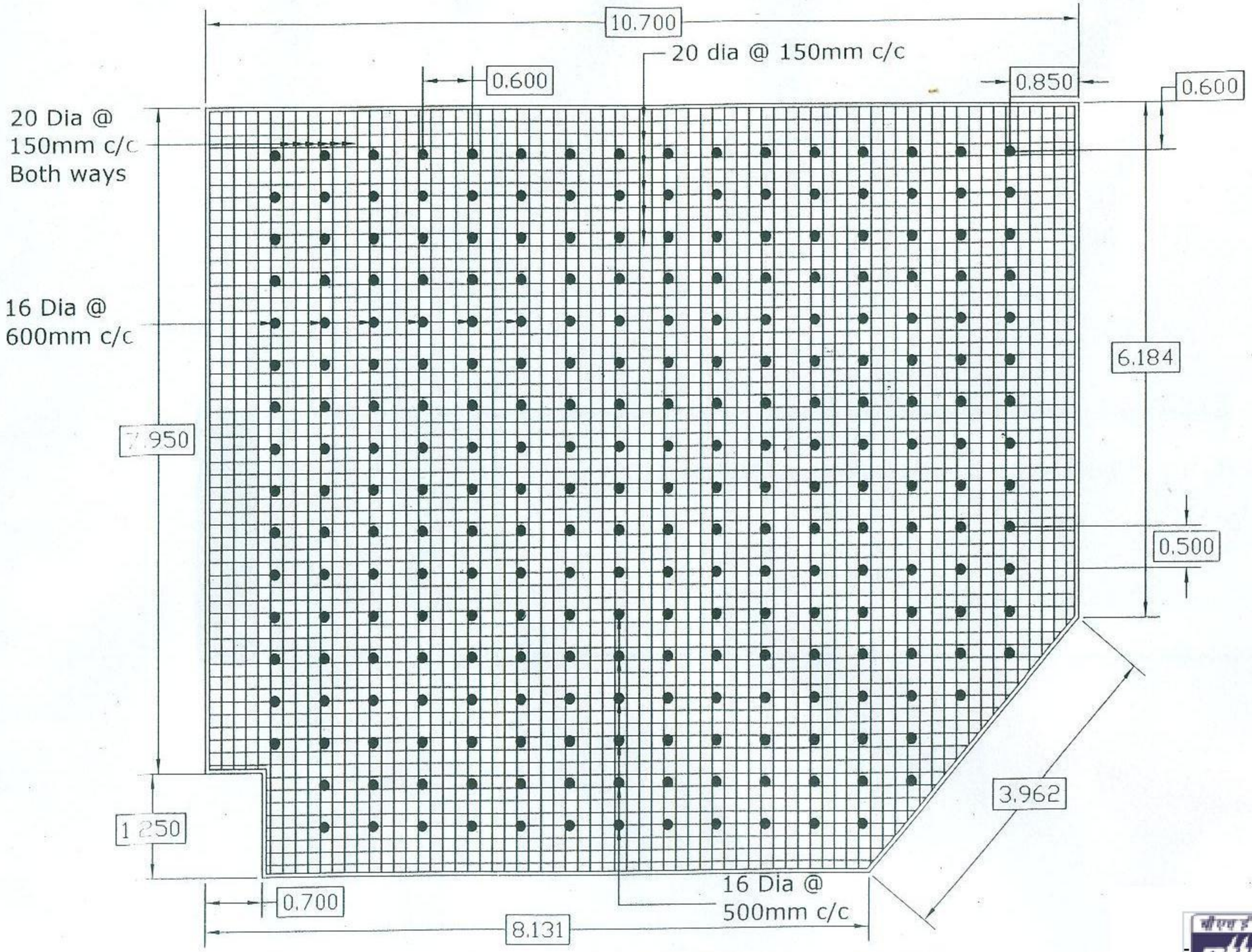

FOUNDATION REINFORCEMENT

BHEL	BHARAT HEAVY ELECTRICALS LIMITED
	CENTRAL FOUNDRY FORGE PLANT
MACHINE NAME : VERTICAL BORING MACHINE	
DRAWING NAME : FOUNDATION DRAWING	
DRAWING NO : CFFP/PMG/VBM/04	

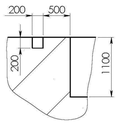

SECTION B-B
SCALE 1 : 40

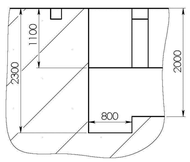

SECTION C-C
SCALE 1 : 40

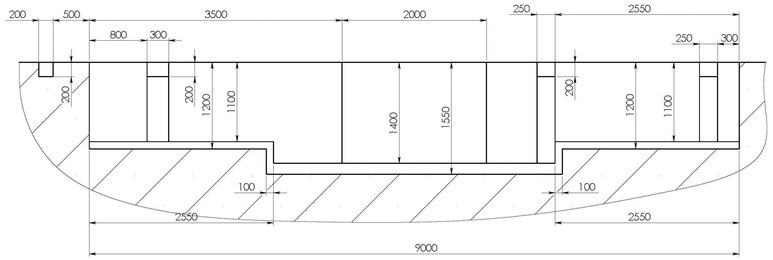

SECTION G-G
SCALE 1 : 30

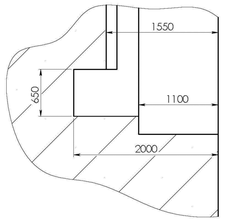

SECTION E-E
SCALE 1 : 30

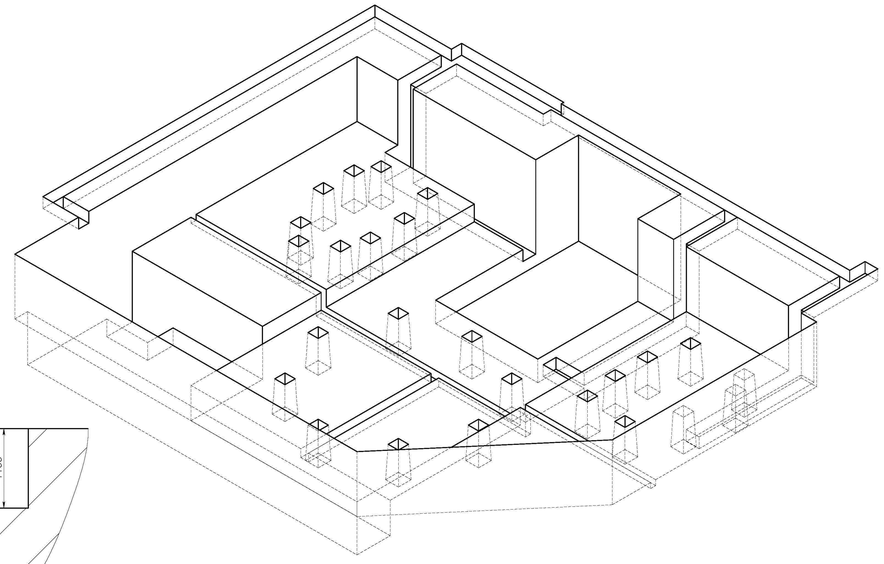

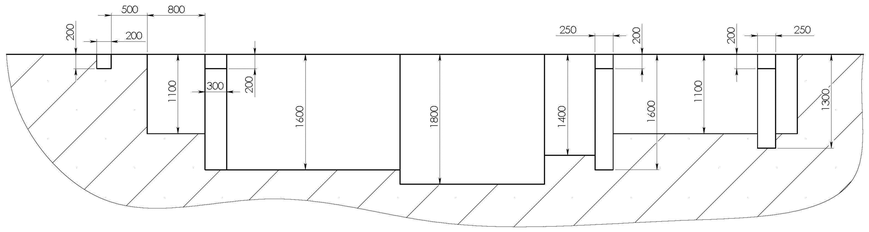

SECTION D-D
SCALE 1 : 30

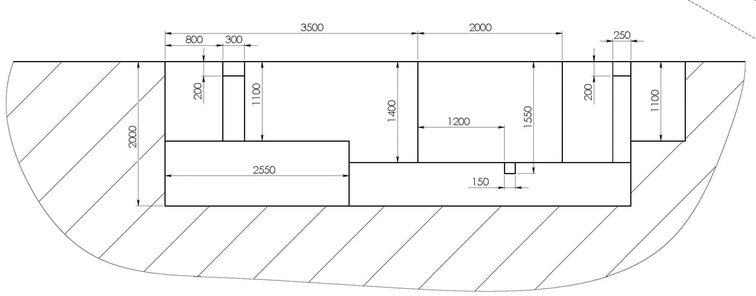

SECTION F-F
SCALE 1 : 30

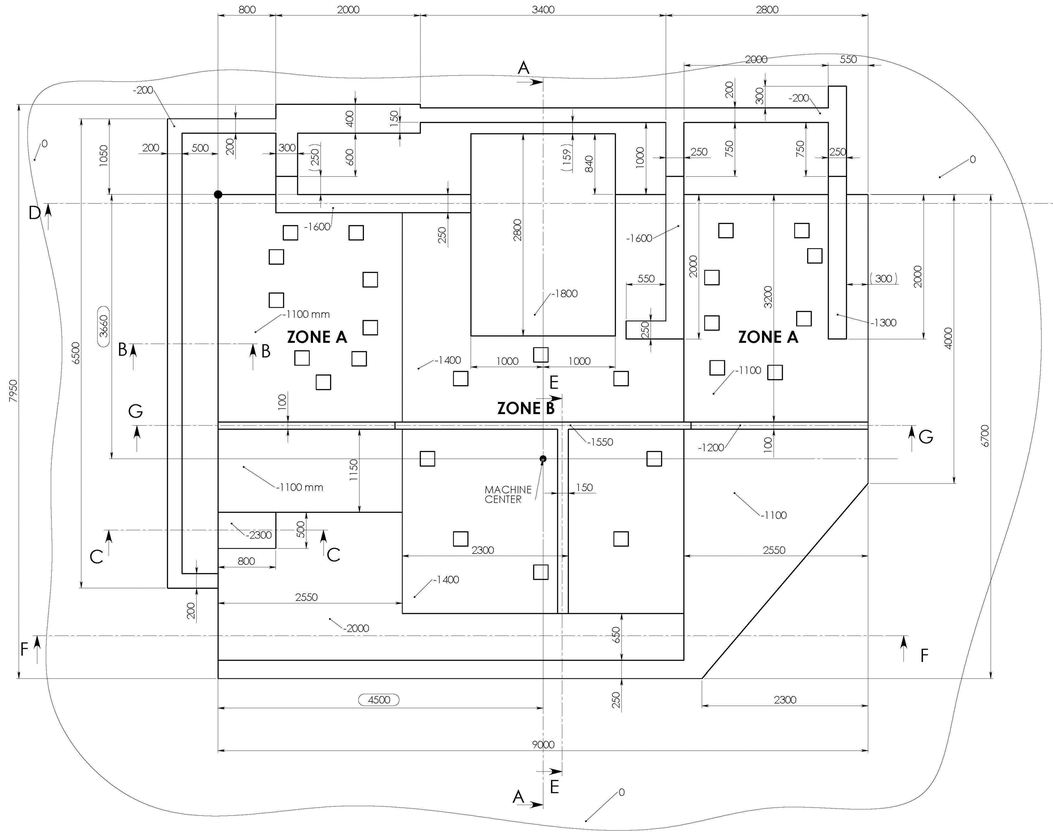

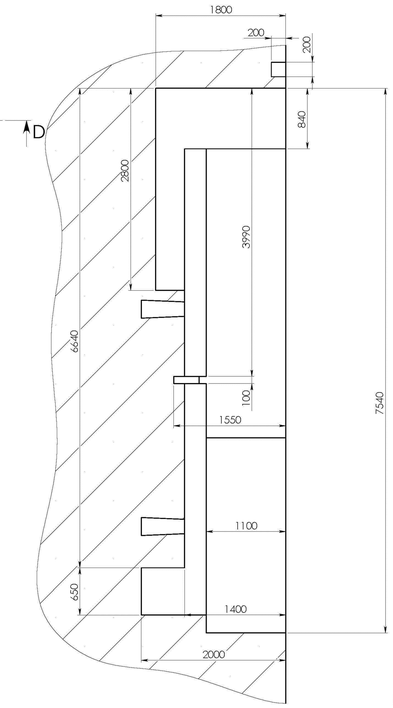

SECTION A-A
SCALE 1 : 30

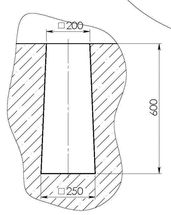

SECTION L-L
SCALE 1 : 10

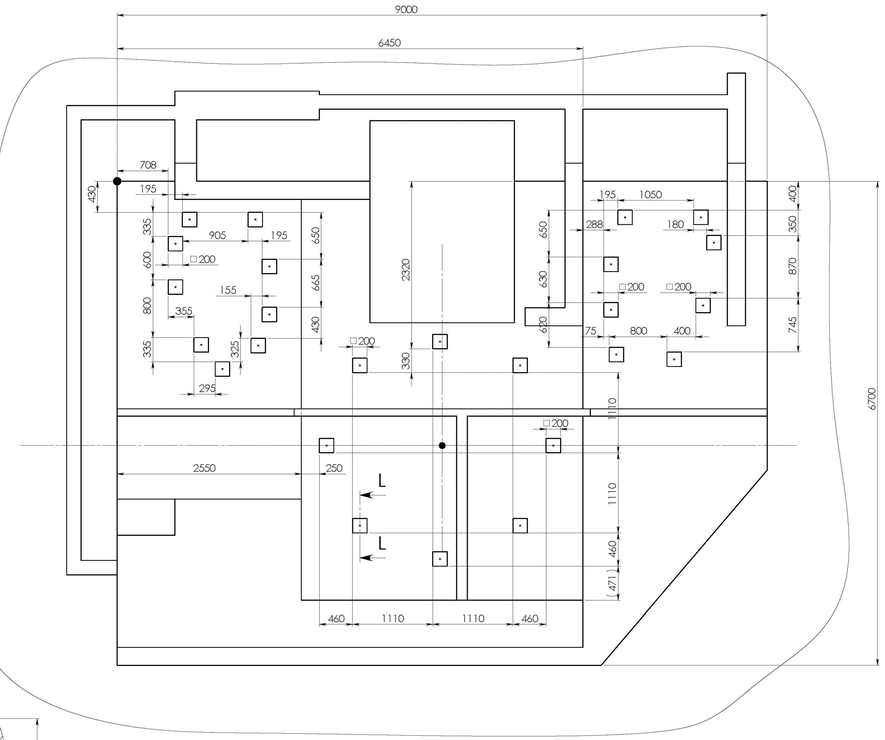

BHARAT HEAVY ELECTRICALS LIMITED

CENTRAL FOUNDRY FORGE PLANT

MACHINE NAME : VERTICAL BORING MACHINE

DRAWING NAME : FOUNDATION DRAWING

DRAWING NO : CFFP/PMG/VBM/05

DRAWING NO : CFFP/PMG/VBM/05