DRG. NO. RD DG 435 1351 1102

FIRST ANGLE PROJECTION

(ALL DIMENSIONS ARE IN mm)

(~3.2)

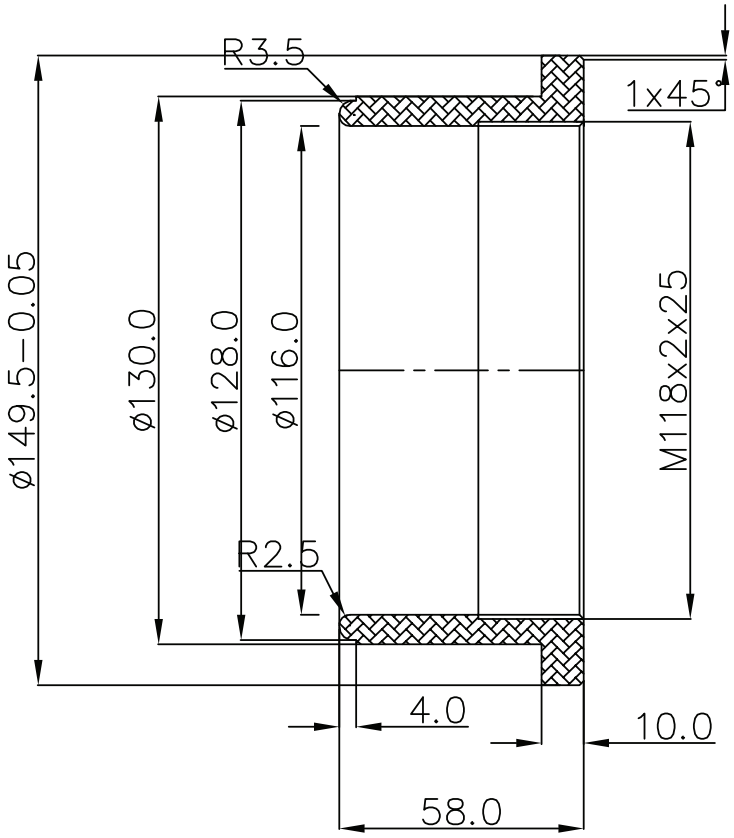

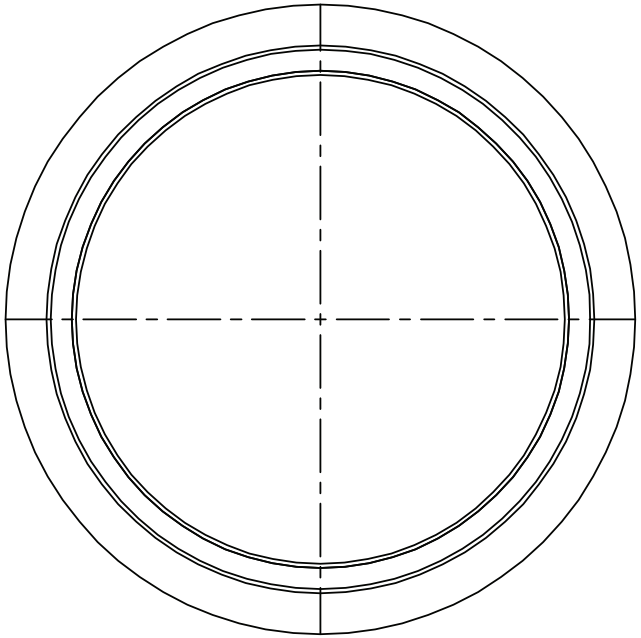

			01	BLOCK				HE−30				
											2	
VAR.00	REMARKS	VAR NO.	ITEM NO.	DESCRIPTION	STD	DRAWING NO.	IT.NO. VAR	MATL. CODE MATL. SPECN.	A C	UNIT	UNIT WT. QTY.	GS

ALL SHARP CORNERS TO BE MACHINED 0.8x45°

TYPE OF PRODUCT: CGSM 145

NAME OF CUSTOMER

BHARAT HEAVY ELECTRICALS LTD.
HYDERABAD

	NAME	SIGN.	DATE	NO.OF VAR.
DRN	BSM		12.06.2014	1
CKD	BSM		12.06.2014	
APPD	MMRAO		12.06.2014	

REV.	DATE	ALTERED / CHECKED	REV.	DATE	ALTERED / CHECKED
ZONE			ZONE		

DEPT. GSG
CODE 35
GRADE OF TOL. DIM. C/M/F
SCALE 1:1
WEIGHT(KG)
REF. TO RD DG 435 1351 1100
ITEM NO. 6
NO.OF ITEMS
TITLE INSERT
CARD CODE
DRAWING NO. RD DG 435 1351 1102
REV.
SHEET NO. 1
NO. OF SHEETS 1

REF. DRG. NO.
SIGN. AND DATE
INVENTORY NO.

THE INFORMATION ON THIS DOCUMENT IS THE PROPERTY OF BHARAT HEAVY ELECTRICALS LIMITED.
IT MUST NOT BE USED DIRECTLY OR INDIRECTLY IN ANY WAY DETRIMENTAL TO THE INTEREST OF THE COMPANY.