FIRST ANGLE PROJECTION

DRG. NO. 3-175-01-02238

(ALL DIMENSIONS ARE IN mm)

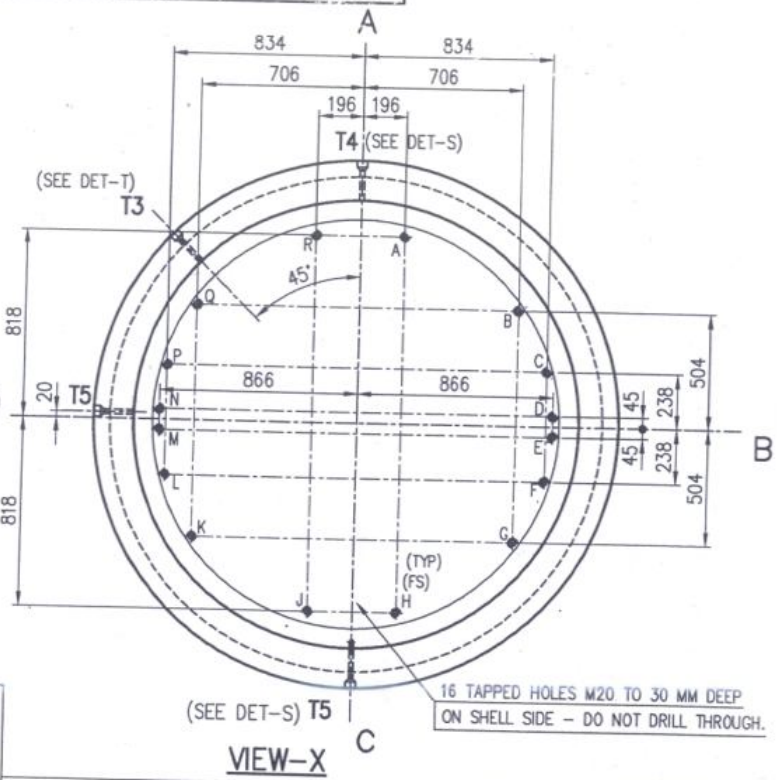

VIEW-X

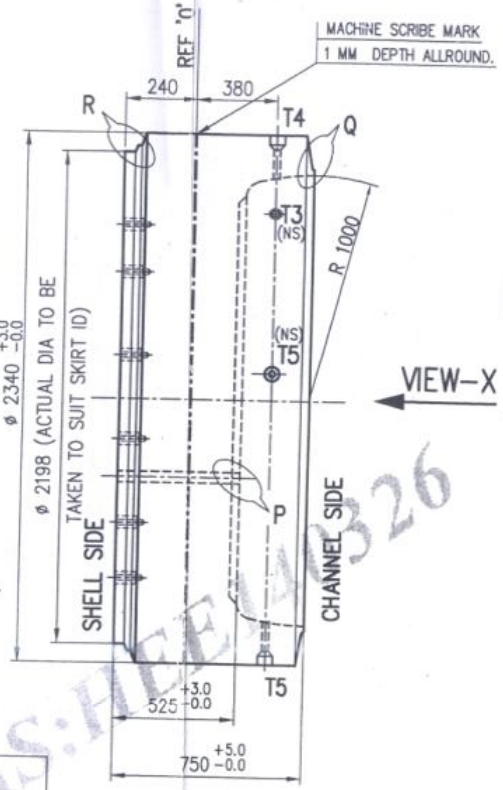

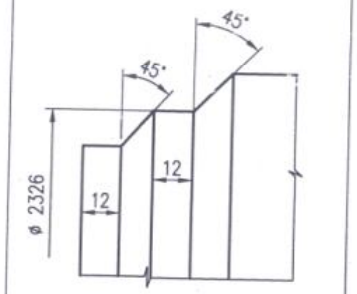

DETAIL - R

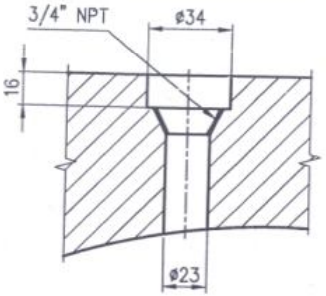

DETAIL - S
(FOR T4 & T5)

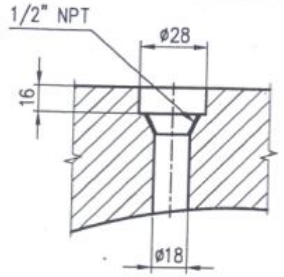

DETAIL - T
(FOR T3)

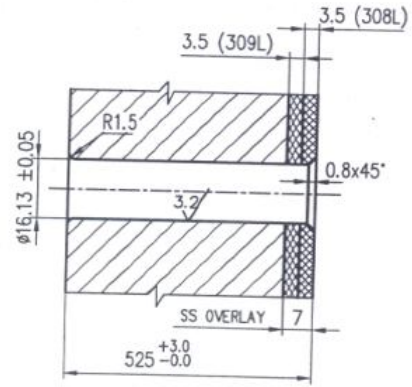

DETAIL - P

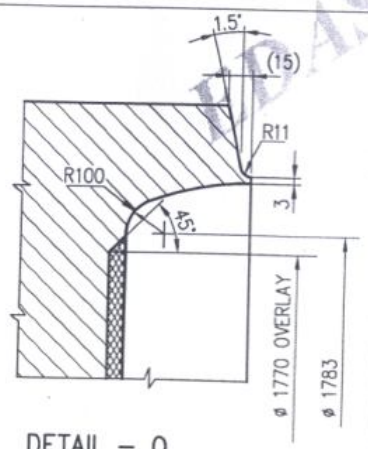

DETAIL - Q

NOTES:-

TECHNOLOGY COPY

1. FOR STAINLESS STEEL OVER LAY FOLLOW WELD DETAIL. W/1 AFTER OVER LAY U.T. REQUIRED. ACCEPTANCE STD HE71046.
2. FOR TUBE LAYOUT REF. DRG. No. 3-175-01-02237.
3. FOR WELD SYMBOLS & PROCEDURES SEE DRG.No.3-175-01-00544.
4. M.T. REQUIRED FOR WELD EDGE PREPN. DETAIL Q & R.
5. P.W.H.T AFTER OVERLAY REQUIRED. PWHT TO BE DONE AFTER SKIRT TO TUBE SHEET WELDING
6. FOR UNSPECIFIED TOLERANCES REFER PRODUCT STD HE71036.

1032227800175 05
1032228100175 05
EDAS:HEE 2326
BHEL-HYD EDAS

TYPE OF PRODUCT OR NAME OF CUSTOMER/PROJECT	660 MW																
BHARAT HEAVY ELECTRICALS LTD. HYDERABAD												NAME	SIGN.	DATE	NO.OF VAR.		
												DRN. jsr	jsr	11.12.13	-NA-		
												CHD. J.S.RAO		23.12.13			
												APPD. B.SRINIVAS		23.12.13			
DEPT. H.E.D	UNTOL. DIMS. GR. ±/M/F		SCALE N.T.S	WEIGHT (KG) NA	REF. TO ASSY. DRG. -NA-	ITEM NO. -NA-	NO.OF ITEMS -NA-										
CODE 405																	
TITLE TUBE SHEET (FOR HPH-6)					CARD CODE	DRAWING NO. 3-175-01-02238	REV. 00										

REV	DATE	ALTERED	CHD	APPD	REV.	DATE	ALTERED	CHD	APPD	REV.	DATE	ALTERED	CHD	APPD

THE INFORMATION ON THIS DOCUMENT IS THE PROPERTY OF BHARAT HEAVY ELECTRICALS LIMITED. IT MUST NOT BE USED DIRECTLY OR INDIRECTLY IN ANY WAY DETRIMENTAL TO THE INTEREST OF THE COMPANY.

COMPUTER FILE NAME

GENERAL DIMENSIONAL LIMITS,FITS & TOLERANCES AS PER HY0230261

REF. DRG. NO.

SIGN. AND DATE

INVENTORY NO

Jan Mon 27 15:07 2014