FIRST ANGLE PROJECTION

(ALL DIMENSIONS ARE IN mm)

DRAWING NO. 1 718 11 01 022

DIMNL. TOL:- AS PER CORP. STD. AA 023 02 08 MEDIUM GRADE UNLESS OTHERWISE STATED.

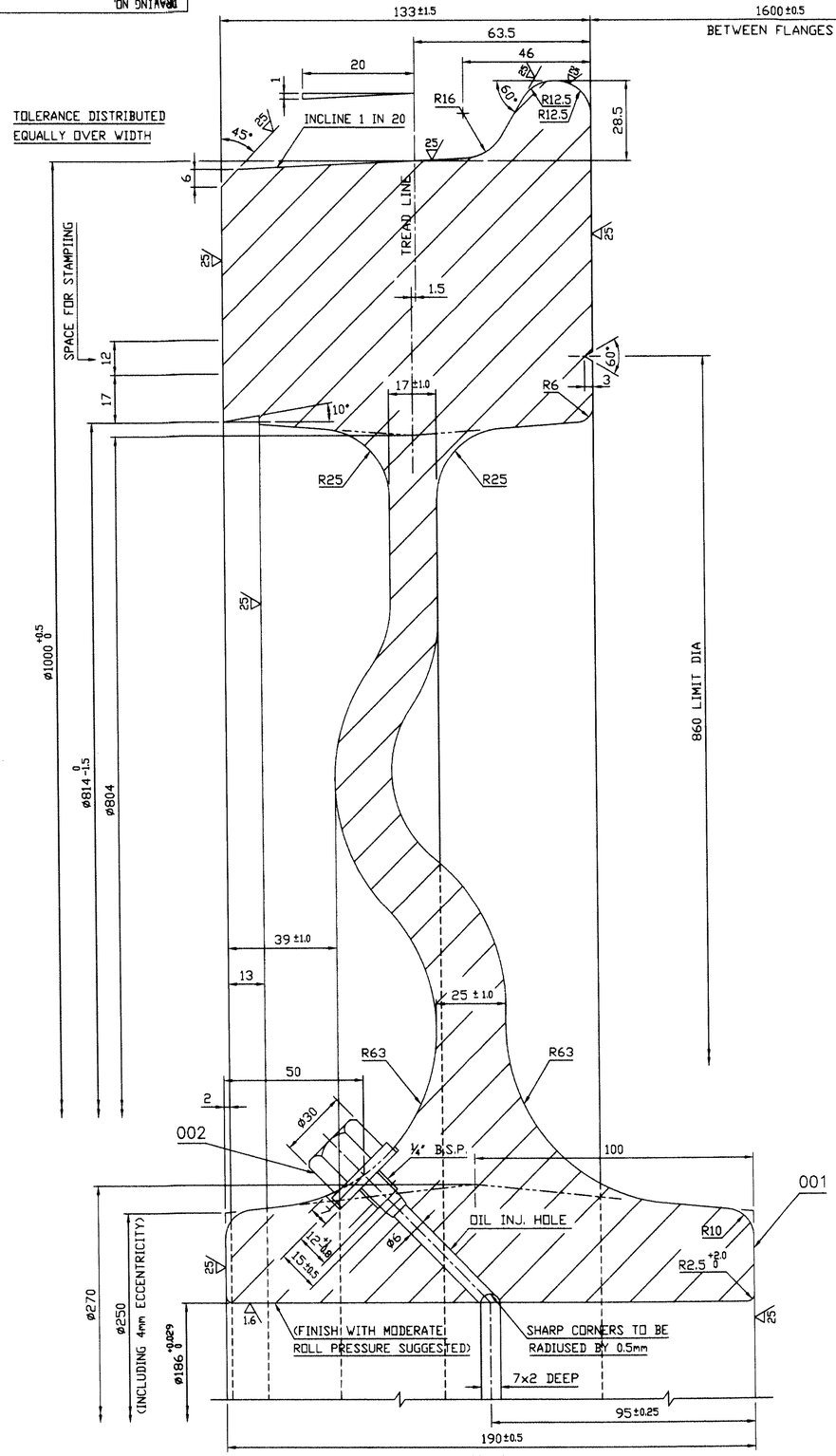

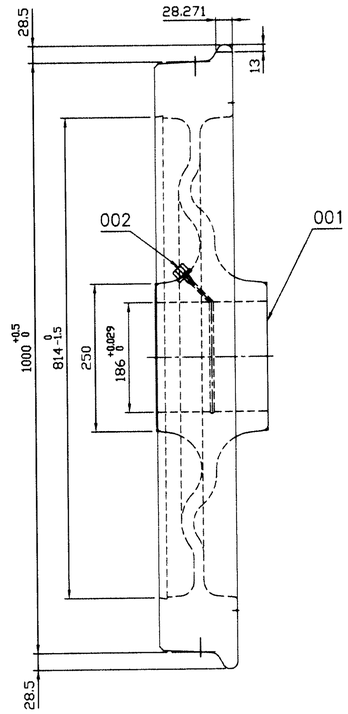

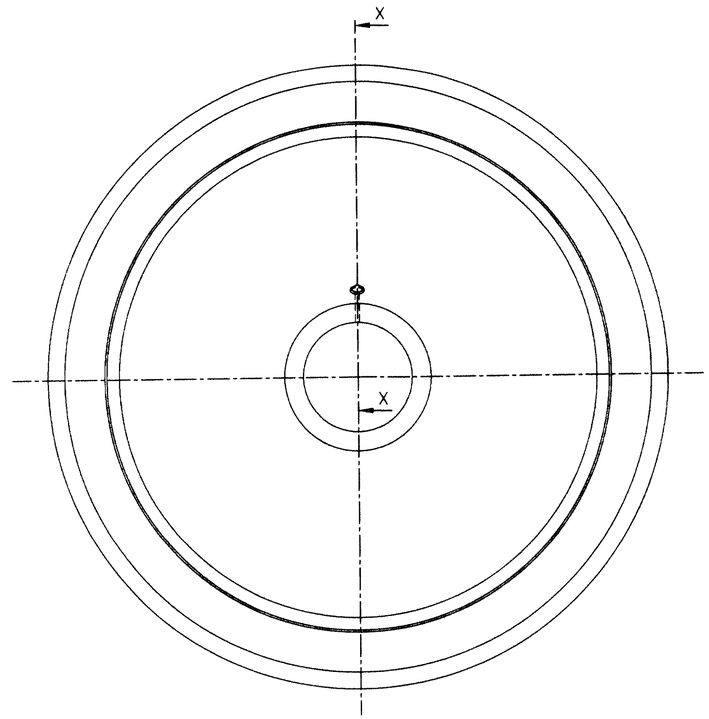

NOTE:-

1. FINISH (PAINTING):-
   (I) THE FINISHED BORE TO BE COATED LIBERALLY BY SUITABLE PETROLIUM JELLY.
   (II) OTHER SUFACES TO BE GIVEN TWO COATS OF RED OXIDE PRIMER AFTER SHOT BLASTING (PROTECT THE BORE, WHILE SHOT BLASTING).
   FINALLY OUT SIDE SURFACE OF RIM TO BE GIVEN TWO COATS OF SILVER WHITE SYNTHETIC ENAMEL. REMAINING SURFACE TO BE GIVEN TWO COATS OF MATT BLACK SYNTHETIC ENAMEL.
2. ITEM 002 TO BE CADMIUM PLATED AND PASSIVATED TO 0.005TK.

STYLE LIST				
STYLE NO.	ITEM VAR	DESCRIPTION	VERIFIED SIGN.	VERIFIED DATE
958510	00	WHEEL (DIA 1000)		

THIS DRG. SUPERSEDS DRG. NO. 1 718 11 01 002

VAR. 00	REMARKS	VAR NO.	ITEM NO.	DESCRIPTION	STD	DRAWING NO.	IT. NO. / VAR.	MATL. CODE / MATL. SPECN	A/C	UNIT	UNIT WT. (Kg.) / QTY.	GS	ZONE
001	B.OT		002	PLUG		4 719 11 01 005	00	ST. 706179			0.017		
001	B.OT		001	WHEEL				IRS: R-34			450.000		

CARD TYPE - 3 CARD TYPE - 1 CARD TYPE - 2

ADDITIONAL INFORMATION
W.O.NO. 3504 7G32200
STATUS OF DRAWING U

DISTRIBUTION OF PRINTS
LME (DV) - 1
LMP (DV) - 1
LMM (DV) - 3

TYPE OF PRODUCT 350 / 700 hp DESL
OR
NAME OF CUSTOMER/PROJECT

BHARAT HEAVY ELECTRICALS LTD.
JHANSI

	NAME	SIGN	DATE	NO. OF VAR
DRN	Santosh	Sd/-	17.08.92	01
CHD	M.Lakra	Sd/-	19.09.92	
APPD	PGK/SKS	Sd/-	19.09.92	

DEPT	GRADE OF UN. TOL.	SCALE	WEIGHT (KG)	REF. TO ASSY. NO.	ITEM NO.	NO. OF ITEM
LME CODE 404	DIM.	1 : 5	450.017	1 718 11 01 019	001	002

TITLE WHEEL (DIA 1000) (STANDARD FLANGE)

CARD CODE

DRAWING NO. 1 718 11 01 022 REV. 10

SHEET NO. 01 NO. OF SHEETS 01

SIZE A1

REV	DATE	ALTERED	CHECKED	APPD.
10	12.02.15	DIMN.13 & 28.271 ADDED. DRG. UPDATED AND REDRAWN.	Rajesh	
09	03.09.07	DRG. UPDATED AND REDRAWN.	Sd/-	Sd/-
08	04.05.07		Sd/-	Sd/-

THE INFORMATION ON THIS DOCUMENT IS THE PROPERTY OF BHARAT HEAVY ELECTRICALS LIMITED. IT MUST NOT BE USED DIRECTLY OR INDIRECTLY IN ANY WAY DETRIMENTAL TO THE INTEREST OF THE COMPANY.

INVENTORY NO. | SIGN. & DATE | REF. DRG. NO.