FIRST ANGLE PROJECTION

(ALL DIMENSIONS ARE IN mm)

DRAWING NO. 1 718 11 01 047

DIMNL. TOL:– AS PER CORP. STD. AA 023 02 08 MEDIUM GRADE UNLESS OTHERWISE STATED.

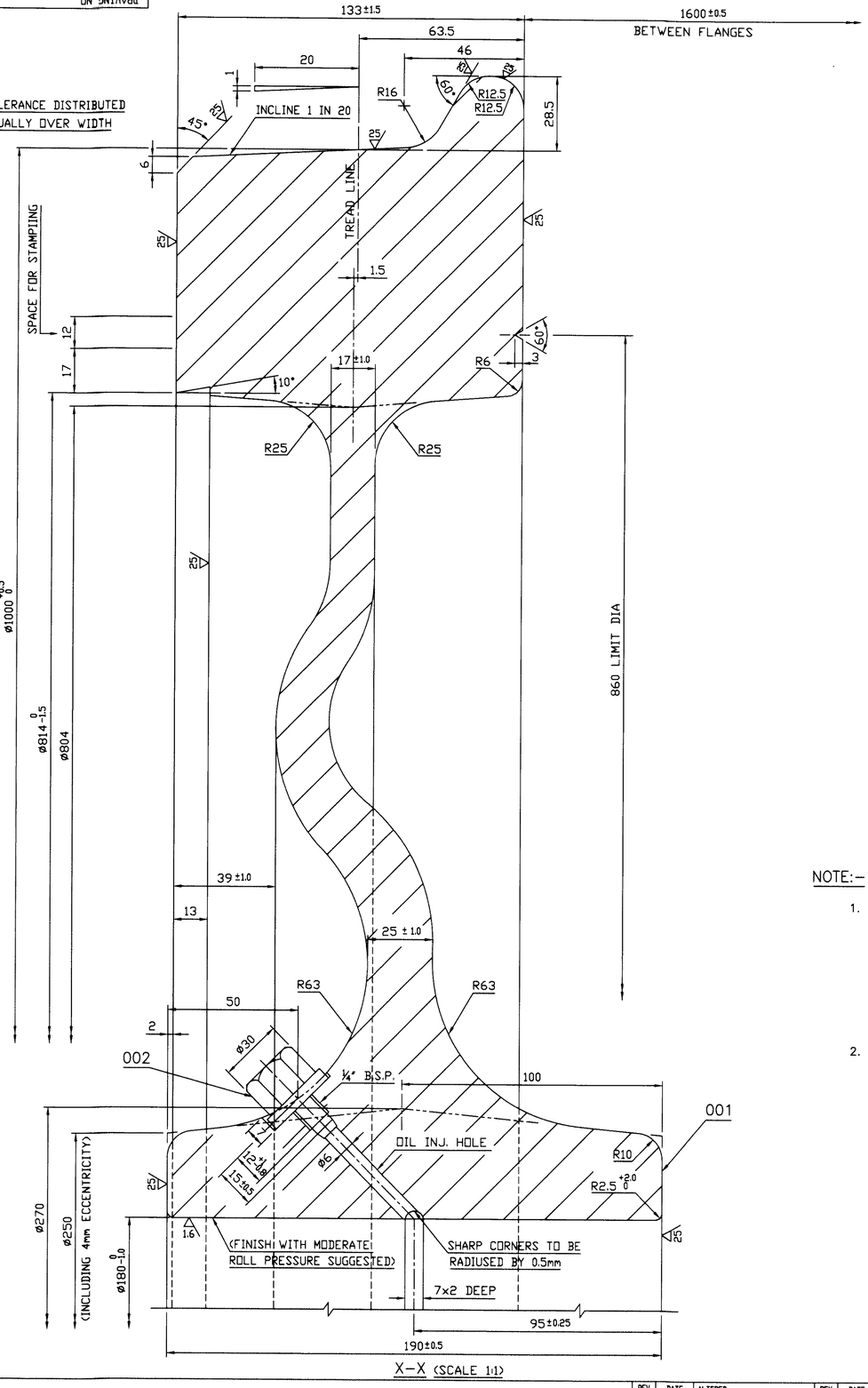

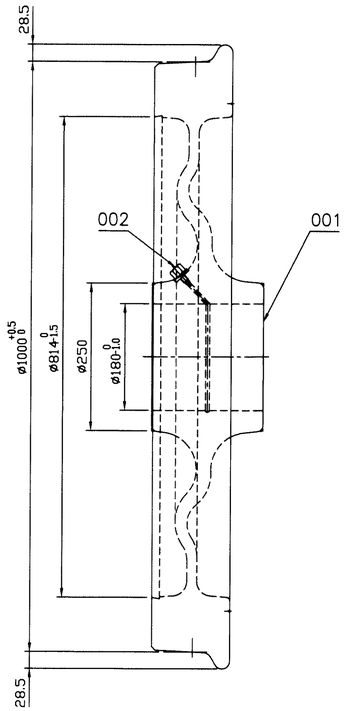

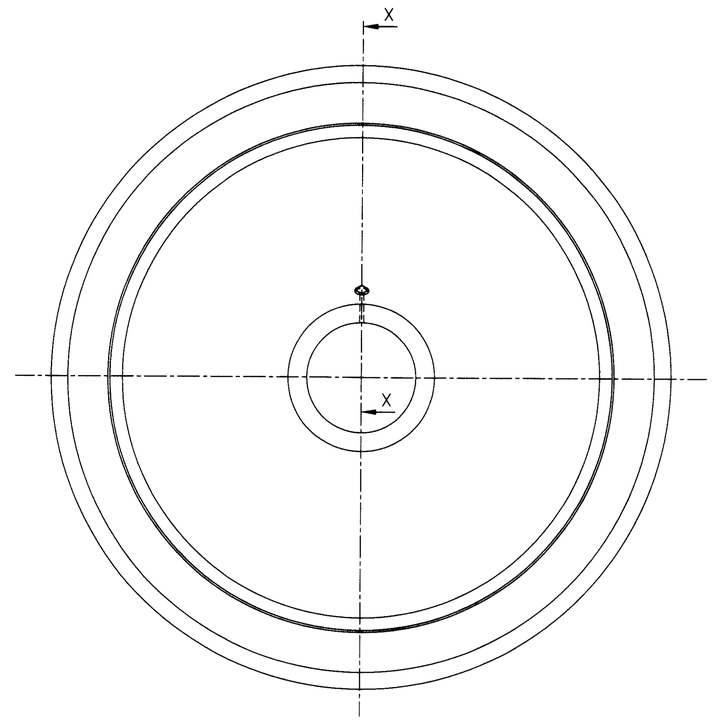

NOTE:–

1. FINISH (PAINTING):–
   - (i) THE FINISHED BORE TO BE COATED LIBERALLY BY SUITABLE PETROLIUM JELLY.
   - (ii) OTHER SURFACES TO BE GIVEN TWO COATS OF RED OXIDE PRIMER AFTER SHOT BLASTING (PROTECT THE BORE, WHILE SHOT BLASTING).
     FINALLY OUT SIDE SURFACE OF RIM TO BE GIVEN TWO COATS OF SILVER WHITE SYNTHETIC ENAMEL. REMAINING SURFACE TO BE GIVEN TWO COATS OF MATT BLACK SYNTHETIC ENAMEL.
2. ITEM 002 TO BE CADMIUM PLATED AND PASSIVATED TO 0.005TK.

VAR. OD	REMARKS	VAR NO.	ITEM NO.	DESCRIPTION	STD	DRAWING NO.	IT. NO. / VAR.	MATL. CODE / MATL. SPECN	A C	UNIT	UNIT WT. (Kg.) / QTY.	SG	ZONE
001	B.OT		002	PLUG		4 719 11 01 005	00	ST. 706179			0.017		
001	B.OT		001	WHEEL				IRS: R–34			431.000		

CARD TYPE – 3 CARD TYPE – 1 CARD TYPE – 2

ADDITIONAL INFORMATION

STATUS OF DRAWING: U

DISTRIBUTION OF PRINTS
LME (DV) – 1
LMP (DV) – 1
LMM (DV) – 3

TYPE OF PRODUCT OR NAME OF CUSTOMER/PROJECT: 700 hp DESL

BHARAT HEAVY ELECTRICALS LTD. JHANSI

	NAME	SIGN	DATE	NO. OF VAR
DRN	Rajesh		15.04.15	
CHD	Santosh		15.04.15	
APPD	S.S.K./AJAY		15.04.15	01

DEPT. LME CODE 404 | GRADE OF UN. TOL. DIM. BAMPF | SCALE 1 : 5 | WEIGHT (KG) 431.017 | REF. TO ASSY. NO. --- | ITEM NO -- | NO. OF ITEM 002

TITLE: WHEEL (DIA 1000) (STANDARD FLANGE)

CARD CODE | DRAWING NO. 1 718 11 01 047 | REV. 00 | SHEET NO. 01 | NO. OF SHEETS 01

REV	DATE	ALTERED / CHECKED	APPD.

SIZE A1

THE INFORMATION ON THIS DOCUMENT IS THE PROPERTY OF BHARAT HEAVY ELECTRICALS LIMITED. IT MUST NOT BE USED DIRECTLY OR INDIRECTLY IN ANY WAY DETRIMENTAL TO THE INTEREST OF THE COMPANY.

INVENTORY NO. | SIGN. & DATE | REF. DRG. NO.